ALIGN PLANNING

Unit 10, 146 Bundall Road, Bundall, Qld, 4215 O/P
admin@alignplanning.com.au E
0409 888 498 T
www.alignplanning.com.au W

BCC DS
RECEIVED
10-11-2026
APPLICATION REF
A007147353

x. Existing Building Plans

BUILDING INSPECTION REPORT

FINAL INSPECTION CERTIFICATE



ABN - 15 093 140 491

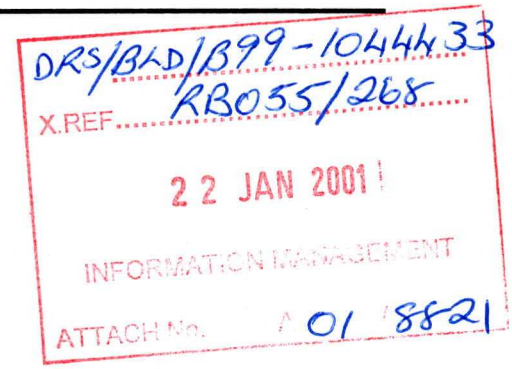

Cenplex Constructions Pty Ltd
PO Box 491
Sunnybank Plaza 4109

SITE ADDRESS

Lot 187 Benhian Street
Calamvale

COUNCIL :	Brisbane
BUILDING DESCRIPTION	Dwelling
ABCC DEVELOPMENT PERMIT # :	950

A Final Inspection was carried out in respect of the above building permit and was APPROVED by :

CERTIFIER : David Biles A74336

SIGNATURE : Monday, 21 August 2000

BUILDING AND PLANNING CONSULTANTS
THE HOME & DISPLAY CENTRE
Cnr Old Chatswood Rd & Pacific H' way
Springwood Qld 4127
Phone: (07) 38087900 Fax: (07) 38084450

David Biles Marty Koskinen Greg Rust

BUILDING INSPECTION REPORT

COUNCIL COPY

Site address: Lot 187 Benham Rd, Calamvale Lot 187 RP 92598

Building Description: House/~~alterations~~/~~garage~~/~~carport~~/~~patio~~/~~pool~~
ABCC Development Permit Number: 99-10197

BUILDING AND PLANNING CONSULTANTS
THE HOME AND BUILDING DISPLAY CENTRE
Cnr Old Chatswood Rd & Pacific Highway
Springwood Qld 4127
Phone: (07) 3808 7900 Fax: (07) 3808 4450

Inspection Checklist of Satisfactory Compliance as per approved plans, BCA and Standard Building Regulations.

Footing/Slab/pool reinforcement	Y	o	N	o	n/a	o	Frame	Y	o	N	o	n/a	o	Final	Y	o	N	o	n/a	o
1. Approved Plans on Site	o	o			✓	o	1. Wall Frame Single/Upper storey	o	o			o	o	1. Boundary clearances	✓	o			o	o
2. Set out Satisfactory	o	o			o	o	2. Wall Frame Lower/	o	o			o	o	2. Floor levels	✓	o			o	o
3. Excavation Satisfactory dry & clean	o	o			o	o	3. Roof framing pitched/trusses 4. Batten (roof)	o	o			o	o	3. Weather proof/flashing weep holes provided	✓	o			o	o
4. Reinforcement Type and Placement correct	o	o			o	o	5. Bracing roof/wall	o	o			o	o	4. Ventilation and Light	✓	o			o	o
5. Reinforcement laps/cover	o	o			o	o	6. Transfer wall bracing to roof	o	o			o	o	5. Storm water drainage	✓	o			o	o
6. Soil Condition	o	o			o	o	7. Girder trusses over lintels	o	o			o	o	6. Site drainage	✓	o			o	o
7. Moisture Barrier – Lapped/Taped	o	o			o	o	8. TieDown roof to walls 9. Floor to foundations	o	o			o	o	7. Stairs/Handrails 8. Balustrades	✓	o			o	o
8. AHD Floor Level Checked	o	o			o	o	10. Truss clearance internal walls	o	o			o	o	9. Termite protection notice (meterbox)	✓	o			o	o
9. Termite Treatment – Physical/Chemical	o	o			o	o	11. Sub floor bracing	o	o			o	o	10. Wet area installations 11. Bathroom/Laundry etc	✓	o			o	o
Pools	o	o			o	o	12. STC Ratings	o	o			o	o	12. Vermin proofing	✓	o			o	o
10. Skimmer box in position	o	o			o	o	13. Fire separation	o	o			o	o	13. Smoke detectors	✓	o			o	o
11. Hydrostatic Valve in position	o	o			o	o	14. D.P.C / Flashing	o	o			o	o	14. Retaining walls	o	o			X	
12. Earth wire in Position	o	o			o	o	15. Connections and Fixings	o	o			o	o	15. Lift of hinges to W.C	✓	o			o	o
13.							16. Frame Approved					10/1/00		16. Conformance with plans	✓	o			o	o
Can work proceed	o	o					**Can work proceed**	o	o					17. **final approved**	✓	o			o	o

o **Inspection Results**
o Generally complies with approved plans
Subject to items below Yes ✓ No o

Requires further inspection
Yes o No ✓

18. Equipment location /operation. Backwash to storm water/sewer	o	o			✓	o	
19. Steps in fencing 1200mm	o	o			o	o	
20. Quadrant 900mm	o	o			o	o	
21. Clearance under fence 100mm	o	o			o	o	
22. Concourse complete	o	o			o	o	
23. Protection from dwelling	o	o			o	o	
final approved	o	o					

CERTIFICATES REQUIRED
✓ Glazing ✓ Waterproofing ✓ Trusses
o Termite ✓ Engineers
✓ Smoke Alarm o Other

REQUESTS

Final Inspection Approved subject to;

(1) Termite Treatment Certificates to be supplied.

BUILDING CERTIFIER –

Name: Marky Koskinen Sign: _____ QBSA Accreditation No: A81402

Contact on site: Kelly Harvey Date: 15/8/00

NOTIFICATION OF ELECTRICAL WORK

SECTION A - CUSTOMER DETAILS (Please use BLOCK LETTERS)

Name: _____ Telephone No: (__) _____
Applicant for Supply / Customer

Address: Lot 59 Benham St Caboolture Postcode: _____
(If Street No. not known please use Lot No. or other identification of premises)

Nearest Cross Street: _____ Meter or Service No: _____

Date: 10 · 8 · 2000

Job No.

SECTION B - INSTALLATION WORK DETAILS covered by this notice:

TYPE: (Indicate ✓ or ✗ in all appropriate boxes)

- ☑ New Installation
- ☐ Alteration / Addition to existing installation
- ☐ Repair only
- ☐ Consumers Mains or Main Switchboard
- ☐ High Voltage Installation
- ☐ Rectification of Defects (Defect Notice _____)
- ☐ Additional Meter/s

Number and Rating of Light Points	Number of Socket Outlets			Appliances		Particulars of Other Work
	Single GPOs	Double GPOs	Other	Type	Rating	
						3 Smoke Det 240V with 9 Volt Battery Backup

The following information should also be provided if relevant to the installation work:

Consumers Mains Size (Amps/mm²): _____ Maximum Demand: _____

Main Earth Connection Location: _____

Water Pipe Bond Connection Location: _____

SECTION C - TEST REPORT proving that the installation work complies with AS 3000, SAA Wiring Rules

TESTS: AND COMPLIES WITH AS 3786	
1. **EARTH** continuity and safe earth resistance.	✓
2. Safe **INSULATION RESISTANCE**.	✓
3. Correct **POLARITY**.	✓
4. No **TRANSPOSITION** of earthing and neutral conductors.	✓
5. No **SHORT CIRCUIT** between conductors.	✓
6. No **INTERMIX** between conductors of different circuits.	✓
7. Switchboard and /or equipment mounted thereon in correctly **MARKED** to indicate -	✓
- the corresponding active and neutral connections for each circuit.	✓
- the relationship of the various sections of the installation.	✓
8. The **NUMBER OF POINTS** connected to each circuit does not exceed the maximum permissible.	✓
9. The installation work **OPERATES** in the manner intended.	✓

CERTIFICATE OF TEST AND CONNECTION

I certify that the electrical installation work listed above has been tested in accordance with the prescribed procedure and that such work complies in every respect with the requirements of the *Electricity Act 1994* and has been connected to the source of supply.

Details of Electrical Contractor	Name: ROBERT JAMRIK	Details of Electrical Mechanic who tested and connected the electrical work listed above	Name: ROBERT JAMRIK	
	Address: 19 Manderson Court Belivah Qld. 4207		No. of Certificate of Competency: 12467	Date: 10 · 8 · 2000
			Signature of Electrical Mechanic:	
Licence No: 12467	Phone No: 0419 679 152	Date: 10 · 8 · 2000	Signature of Electrical Contractor or his Endorsee:	

M.A. TILING
22 FENCHURCH ST
ROCHEDALE QLD 4123
ABN 74733602275

WATERPROOFING CERTIFICATE

This certificate declares that waterproofing to the below stated areas has been applied by myself in accordance with Manufacturers specifications. I also declare that I have been certified and approved by the manufacturer Belgold P.L. to be a competent applicator.

PRODUCT	Belgold Acryilic Waterproofing Membrane
AREAS	Showers and bathroom @ lot 189 Benhaim Rd, Calamvale
DATED	10th August 2000

This product meets or exceeds all relevant Australian standards and carries a 10 year Manufacturers warranty.

Yours sincerely

M Fortunaso

Mark Fortunaso (director).

BBC TRUSS & FRAME FABRICATION (ACN 000 003 378)
54 Caloundra Rd, Caloundra. Ph (07) 5491-6844 Fax (07) 5491-5295

COUNCIL DETAILS REPORT

10:43am 15 OCT 1999
Ver [2.31] PAGE 1
Job Ref: 39715

TRUSS DESIGN CRITERIA FOR COUNCIL PERMIT APPLICATION

Customer name : CENPLEX

Site address : BEN HAN STREET
CALAMVALE

DESIGN CRITERIA

Roofing	Sheet steel (.55mm)
Ceiling	10mm P/Bd direct
Top chord restraints	900 mm
Bottom chord lateral ties	3500 mm (max)
Bottom chord restraints	600 mm
Standard truss spacing	900 mm
Standard roof pitch	20.00 deg
Design wind speed	33 m/s
Region	n/a
Terrain category	n/a
Height of Structure	10 m
Shielding Classification	n/a
Topographic Classification	n/a
Internal pressure coefficient	0.2

Note : Ceiling lining must be fixed to the bottom chords of trusses with nails or screws at maximum 600mm centres.

The truss designs for this job have been determined using computer software provided by the Technical Division within Pryda Truss Systems. These designs are in accordance with sound and widely accepted engineering principles and comply with the following Australian Standards:-

AS1170.1-1989	SAA Loading Code - Dead and Live Loads and Load Combinations
AS1170.2-1989	SAA Loading Code - Wind Loads
AS1720.1-1988	SAA Timber Structures Code Design Methods
AS1649 -1974	Determination of Basic Working Loads for Metal Fasteners for Timber
AS4055 -1992	Wind Loads for Housing

These trusses shall be installed,connected and braced in accordance with the recommendations given in AS4440-1997 Installation of Nailplated timber trusses.

We confirm that the trusses for this project have been manufactured in accordance with the fabrication specifications provided by Pryda Truss Systems

Signed : _____

Date : 15/8/2000

EAST COAST
GEOTECHNICAL PTY. LTD. ENGINEERING CONSULTANTS
ACN 065 058 095

3/246 EVANS ROAD, SALISBURY Q 4107
P.O. BOX 404, SALISBURY Q 4107

Ph: (07)3875 1933
Fax: (07)3277 7746
E-MAIL: manager@eastcoast-geotech.com.au
WEB SITE: www.eastcoast-geotech.com.au

GOLD COAST
Ph: (07)5529 2329
Fax: (07)5529 2182

16th November 1999

Steve Bayet
59 Rowland Street
SLACKS CREEK 4127

268 Benhiam Road, Calamvale
9A1607

The following site inspection was made at the above allotment:

Waffle Raft Slab & Pier Preparation 12/11/99

We hereby certify that the reinforcing steel inspected conforms with our original recommendations.

We further certify that preparations prior to concrete pouring are in our opinion, in accordance with good building practice.

This certificate is formal confirmation of our site inspection carried out on the above date, and must be read and considered in conjunction with our hand written "Engineer Site Inspection Report Sheet" which was issued on site at the time of the above inspection.

This approval does not release the builder and/or the contractor from any obligations to the local authority.

EAST COAST GEOTECHNICAL PTY. LTD.

LINDSAY BAGULEY

Manager
B.E.,M.I.E. Aust. NPER-3 No. 7013
R.P.E.Q. No. 4566
Q.B.S.A. Licence 031545
N.S.W. Contractor Licence 75467C

Boral
Window
Systems

BORAL

BORAL WINDOW SYSTEMS LTD
ACN 004 069 523
67 Robinson Road
Geebung Qld 4034
PO Box 287, Virginia Qld 4014
Telephone (07) 3265 2744
Facsimile (07) 3265 2657

28/01/2000

ZZ-CENPLEX CONST
CASH WITH ORDER
GEEBUNG

DEAR SIR

RE: L187 BENHIAM ST
CALAMVALE**MP220 D20

WE CONFIRM THAT THE BORAL ALUMINIUM WINDOWS AND DOORS SUPPLIED TO THE ABOVE PROJECT WERE MANUFACTURED TO CONFORM TO A 700PA RATING, AND GLAZED AND ASSEMBLED IN ACCORDANCE WITH THE REQUIREMENTS OF AS1288-1994 AND AS2047-1999.

THE RESPONSIBILITY FOR INSTALLING WINDOWS AND DOORS IN THE CORRECT POSITION WITHIN THE STRUCTURE LIES WITH THE PURCHASER.

YOURS FAITHFULLY
BORAL WINDOW SYSTEMS LTD

DAVID BROGAN
STATE SALES MANAGER

F.C.A.

FORMCO Chemical Applicators

A Division of

INDUSTIAL MEMBRANES AND COATINGS PTY. LTD. ABN 39 083 022 564

JOINT SEALANT*WATERPROOFING*CURING MEMBRANES*SEALERS/HARDNERS*EPOXY FINISHES*ANTI GRAFFITI COATINGS

FAX HEADER SHEET

ATTN: K: HARVEY

COMPANY: CENPLEX.

PROJECT: LOT 189 BENHIAM ST

DATE: 18.8.00

FAX NO: 3711 4143

FROM Phil Lee

RE: TERMITE PROTECTION.

PAGES inc this 4

KELLY

Please find attached certification for KORDON INSTALLATION which covers Parts A + B. as a Physical Barrier.

Regards

Phil

24 RAILWAY TCE
ROCKLEA QLD 4106

P O BOX 2024
SALISBURY EAST QLD 4107

PH: 07 3277 3198
FAX: 07 3216 6664

99-10197

KORDON® TMB

Certificate of Compliance

This document is to certify that the KORDON TMB system was installed by an accredited installer, and has been completed generally in accordance with AS 3660.1 - 1995 "Protection of Buildings from Subterranean termites Part 1 - New Buildings" and is in accordance with the KORDON TMB Installation Manual.

Date of Installation: 19th JANUARY 2000

Installation Address: LOT 189 BENHIAM ST. CALAMVALE

For: CENPLEX CONSTRUCTIONS

Owners: —

Specifications: Physical Barrier and Construction Joint

Warranty No: 5932 (Attached)

Installed By: MARK ELLISON Q.B.S.A. S8641

Site Inspection Report No: N/A.

Comments: Perimeter Installed to KORDON SYSTEM complying with AS 3660.1

® KORDON is the Registered Trade Mark of Hoechst Schering AgrEvo Gmbh, Germany

WARRANTY

5932

THIS WARRANTY is granted by AgrEvo Pty. Ltd. ("AgrEvo") (A.C.N. 062 299 469) of 1731 Malvern Road, Glen Iris, Victoria in respect of the Installation of Kordon® TMB ("Kordon") in the Building.

WARRANTY

- This Warranty covers damage by Subterranean Termites ("Termites") only.
- AgrEvo warrants that Kordon shall restrict the entry of Termites into the Building through the Kordon barrier for a period of ten (10) years from the date of installation ("Warranty Period").
- This Warranty covers damage by Termites to structural timbers and internal timbers BUT DOES NOT INCLUDE damage by Termites to:
  (a) chattels of any nature whatsoever including (but without limiting the foregoing) antiques, heirlooms, paintings, artwork and paintings; and
  (b) any pergolas, wiring, extensions to the Building and outhouses.
- If Termite infestation of the Building occurs as a result of the failure of the Kordon and damage by Termites is caused to structural timbers and/or internal timbers fixtures and fittings during the Warranty Period, AgrEvo will without charge to the Owner:
  (a) repair the Kordon barrier where practicable; and/or
  (b) cause the repair or replacement of structural timbers and/or internal timbers so damaged.
- To the extent permitted by the Law of the State or Territory in which the premises are located:
  (a) the liability of AgrEvo under this Warranty is limited to a maximum of $100,000.00 in respect of any one (1) warranty claim.
  (b) all representations and other warranties express or implied and whether arising by virtue of Statute or otherwise are excluded or limited as stated in this Warranty.
- This Warranty shall only have effect if the Kordon is installed by a Registered Builder (which includes a Registered Owner Builder or an Accredited AgrEvo Installer).

OWNER'S RESPONSIBILITIES

- The Owner of the Building during the Warranty Period ("Owner"), at the Owner's expense, arrange for thorough and regular inspection of the Building for the presence of Termites at intervals not exceeding 12 months by a licensed pest controller.
- Where the Termite risk is high or the Building type is susceptible to Termite attack (eg. North of the 26th parallel) more frequent inspections (3-6 months) must be undertaken.
- If Termites are detected or are found to have breached the Kordon barrier, the Owner must, within 7days of such detection, notify AgrEvo.

EXCLUSIONS

This Warranty shall be void and have no effect in any of the following circumstances:

- The Kordon barrier is damaged, modified, bridged or otherwise interfered with by any person or any act, fact, matter or thing beyond the reasonable control of AgrEvo.
- The Building is structurally modified, altered or otherwise changed in any way which would or may diminish the effectiveness of the Kordon as a Termite barrier.
- If at any time during the Warranty Period, the Owner
  (a) allows or fails to prevent accumulation of
    (i) wood, rubbish or timber against the Building; and
    (ii) finished ground level around the Building to a height which does not comply with the terms of the Installation Manual.
  (b) allows the barrier dividing the soil surface and the structure of the Building formed by the Kordon to be bridged or broken by any other material or matter through which Termites may by-pass the Kordon and infest the Building.
- The Owner shall fail to carry out any of the Owner's responsibilities.
- Termites shall enter the Building through any manner other than by a breach of the Kordon barrier.
- If the Kordon is installed other than by a Registered Builder or Accredited AgrEvo Installer.

BUILDING: LOT 189 BENHAM ST.
CARAMVALE, QLD.
(ADDRESS TO BE INSERTED)

DATE OF INSTALLATION: 17.1.2000

REGISTERED BUILDER/AGREVO ACCREDITED INSTALLER:
M. ELLISON KORDON INSTALLER N° 151 Q.
(NAME AND ADDRESS) C/- FORMOSA CHEMICAL APPLICATORS
49 RAILWAY PARADE ROCKLEA QLD 4106

KORDON® TERMITE BARRIER

THIS WARRANTY SHALL BE VOID UNLESS THE KORDON HAS BEEN INSTALLED BY A REGISTERED BUILDER OR AGREVO ACCREDITED INSTALLER

APRIL 1999

Aventis Environmental Science

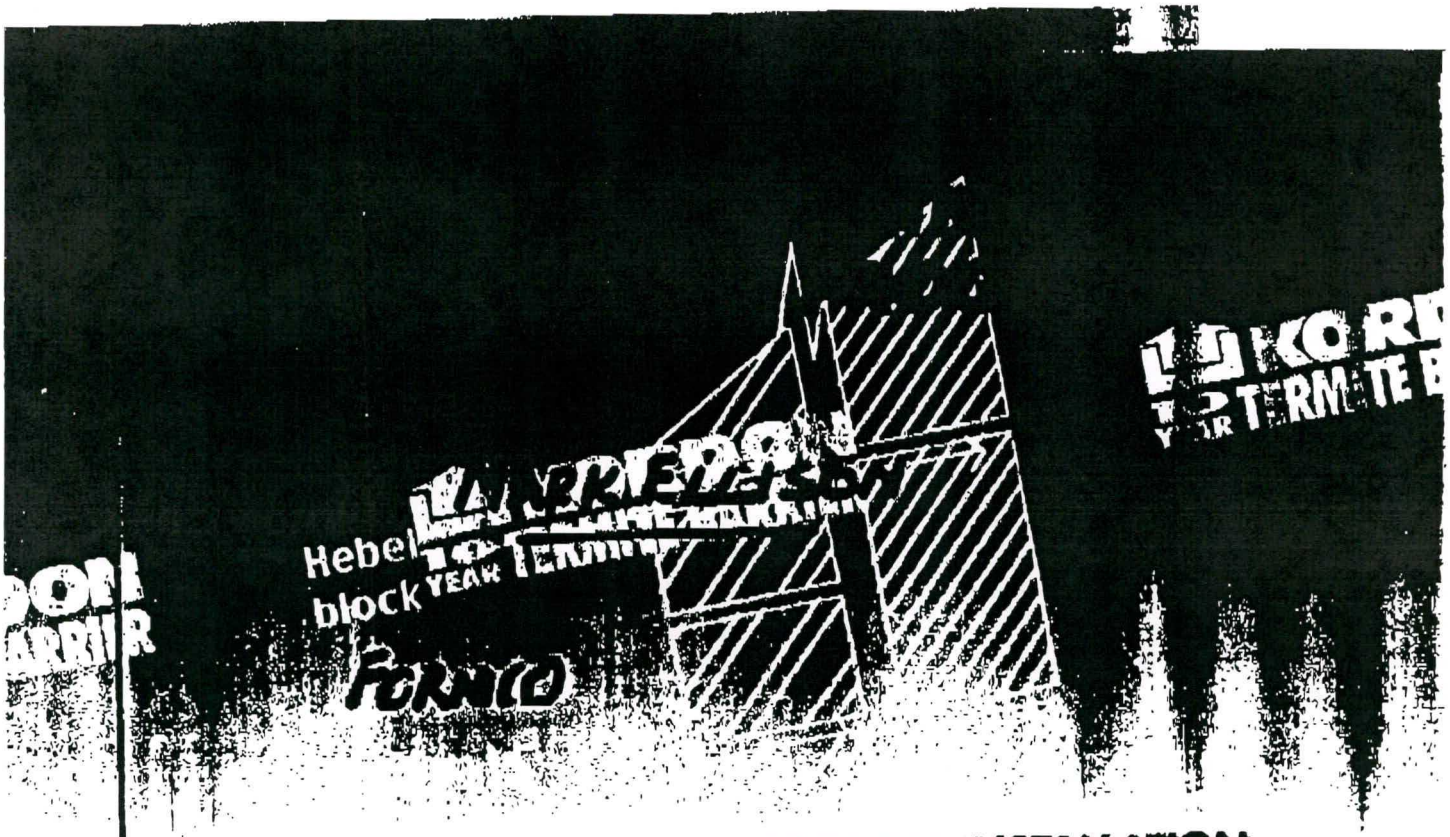

has completed the **AVENTIS KORDON INSTALLATION TRAINING PROGRAM** and is accredited to perform **KORDON 10-YEAR TERMITE BARRIER** underslab and perimeter installations throughout Australia in 2000.

The program equips trainees to install Kordon for all approved housing plans. Each licence is reviewed annually, with technical updates and on-going training provided as required.

DATE: 30.4.00 LICENCE No: 151Q

Kordon Product Manager

KORDON® 10 YEAR TERMITE BARRIER

2 0 0 0

BELGOLD (QLD) PTY LTD

This certificate is to verify that

Mark Fortunaso

has been approved to apply Belgold Waterproofing Membrane Systems.

Belgold (Qld) Pty Ltd guarantee their product Acrylic Waterproofing Membrane against any material defects for 10 years provided that the product has been used in accordance with Australian Standards and printed directions.

Mark Fortunaso — M Fortunaso

Applicator

WATERPROOFING — "ARCYLLIC MEMBRANE" / FIBERGLASS MAT

Category

20/6/96

Date

LEO KNEZEVIC
CHIEF CHEMIST/MANAGING DIRECTOR

Signature

F5 CERTIFICATE OF TERMITICIDE APPLICATION

B1U23

STANDARDS AUSTRALIA

PROTECTION OF BUILDING FROM SUBTERRANEAN TERMITES - PREVENTION, DETECTION AND TREATMENT OF INFESTATION

CERTIFICATE OF COMPLETION AUSTRALIAN STANDARD AS 3660.1 1995

This certificate refers to clauses 3.7, 4.3 and 5.5 of AS 3660.1 and that Standard should be read in conjunction with this certificate.

NAME OF OWNER: COMPLEX CONC

SITE ADDRESS: LOT 189 BENHAM RD CALAMVALE

TYPE OF TREATMENT: ☑ CHEMICAL ☐ PHYSICAL BARRIER ☐ PRECONSTRUCTION ☑ EXISTING BUILDING

POST CODE:

TERMITICIDE USED: CREOFOS	"RED STOP" uPVC. COLLARS TO PENETRATIONS
CONCENTRATION OF EMULSION: 9 2L 100 g/L	DEVIATIONS FROM STANDARD APPLICATIONS GIVE REASONS:
VOLUME OF EMULSION USED: 125L L	
AREA PROTECTED: PERIMETER M²	
TOTAL GROUND AREA OF BUILDING: 754m M²	

THIS TREATMENT INCLUDED TERMITICIDE APPLICATION CERTIFICATE No. ..... Date	TREATMENT NOTICE FIXED (YES) ~~(NO)~~ Location of notice: M/BOX

CERTIFICATE - This document certifies that the above property has been treated in accordance with AS 3660.1 except for the limitations listed below and overleaf and those recorded on the Certificate of termiticide application referred to.

Specific limitations .....

PEST CONTROL FIRM:

FORMCO CHEMICAL APPLICATORS
24 Railway Terrace
Rocklea Qld 4106
Ph: (07) 3277 3198

NAME OF APPLICATOR: I. VUKSIC

Registration No ..... Licence No. 10747

Authorised signatory: [signature]

Date: 11.8.2000

PRECONSTRUCTION TREATMENT

This builder warrants to provide this certificate to the purchaser as part of the contract of sale.

Builder's name: .....

Address: .....

Post code ..... Authorised signatory: .....

F5 CERTIFICATE OF TERMITICIDE APPLICATION

No. 4760

STANDARDS AUSTRALIA

PROTECTION OF BUILDING FROM SUBTERRANEAN TERMITES - PREVENTION, DETECTION AND TREATMENT OF INFESTATION

CERTIFICATE OF COMPLETION
AUSTRALIAN STANDARD AS 3660.1 1995

This certificate refers to clauses 3.7, 4.3 and 5.5 of AS 3660.1 and that Standard should be read in conjunction with this certificate.

NAME OF OWNER: CEMPLEX CONSTRUCTION

SITE ADDRESS: LOT 189 BENHIAM ST.

CALAMVALE POST CODE:

TYPE OF TREATMENT: ☒ CHEMICAL ☑ PRECONSTRUCTION ☐ EXISTING BUILDING
☑ PHYSICAL BARRIER

TERMITICIDE USED: Pro-Tek	"RED STOP" uPVC. COLLARS TO PENETRATIONS
CONCENTRATION OF EMULSION: 2.4 g/L	DEVIATIONS FROM STANDARD APPLICATIONS: RED STOP COLLARS AS INDICATED.
VOLUME OF EMULSION USED: 2470 L	GIVE REASONS:
AREA PROTECTED: 494 M²	
TOTAL GROUND AREA OF BUILDING: M²	

PLAN OF BUILDING SITE SHOWING TREATED AREAS

(Use of Legend codes to indicate plumbing, piers, steps, treated areas)

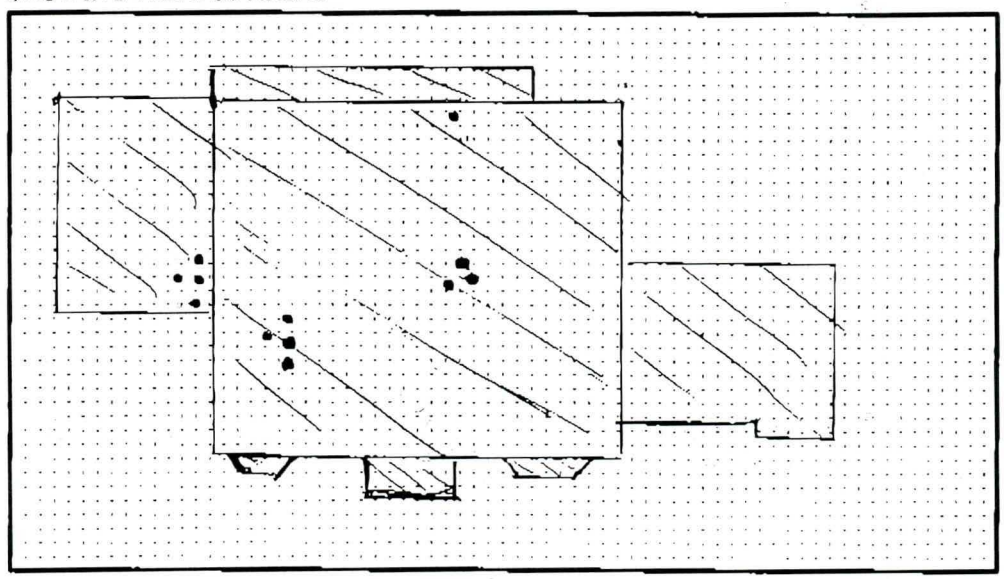

LEGEND

Plumbing line

Pier

Steps

Treated areas

Physical Barrier

SITE PREPARATIONS - CERTIFICATION BY BUILDER

I certify that site preparations have been carried out in accordance with the requirements of AS 3660.1 (see overleaf)

Limitations (please specify):

The builder warrants to provide this certificate to the purchaser as part of the contract of sale

Builder's name: Authorised signatory:

TERMITICIDE APPLICATION CERTIFICATE BY BUILDER

I certify that termiticide application has been carried out in accordance with the requirements of AS 3660.1

Limitations (please specify):

PEST CONTROL FIRM:	FORMCO CHEMICAL APPLICATORS	NAME OF APPLICATOR
Address:	49 Railway Parade	Licence No: Q357
A.B.N. 59 083 022 584	Rocklea Qld 4106	Authorised signatory:
Phone:	Ph: (07) 3277 3198	Date: 19/12/1999

A certificate of completion referring to this termiticide application is required to confirm that the treatment for prevention of infestation by the chemical methods has been completed.

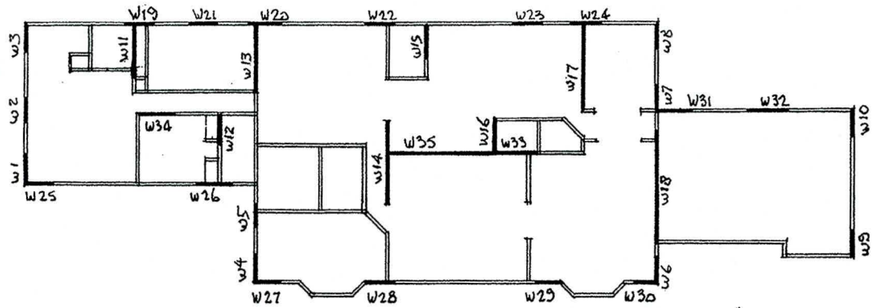

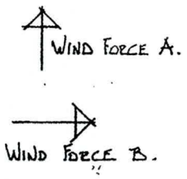

GROUND FLOOR WALL BRACING

	WIND FORCE A			WIND FORCE	
W1	1·2TB 4B	4·8	W19	1·2TB 4B	4·8
W2	"	4·8	W20	"	4·8
W3	"	4·8	W21	"	4·8
W4	"	4·8	W22	"	4·8
W5	"	4·8	W23	"	4·8
W6	"	4·8	W24	"	4·8
W7	"	4·8	W25	"	4·8
W8	"	4·8	W26	"	4·8
W9	"	4·8	W27	"	4·8
W10	"	4·8	W28	"	4·8
W11	2·4TB 4B	9·6	W29	"	4·8
W12	1·2TB 3A	2·4	W30	"	4·8
W13	3·0 TB 4B	12·0	W31	"	4·8
W14	3·6 TB 4B	14·4	W32	"	4·8
W15	1·5 TB 3A	3·0	W33	1·8 TB 3A	3·6
W16	1·5 TB 3A	3·0	W34	2·4 TB 1	2·4
W17	4·0TB 4B	16·0	W35	5·0 TB 4B	20·0
W18	5·0 TB 4B	20·0			
REQUIRED		122·05 kN	REQUIRED		70·4 kN
ACHIEVED		128·40 kN	ACHIEVED		93·2 kN.

COUNCIL COPY

CONSTRUCTION COPY
TO REMAIN ON SITE DURING WHOLE OF CONSTR

Building Codes Certification
APPROVED
Building Certifier:
BSA No: A74336

AMENDED PLANS

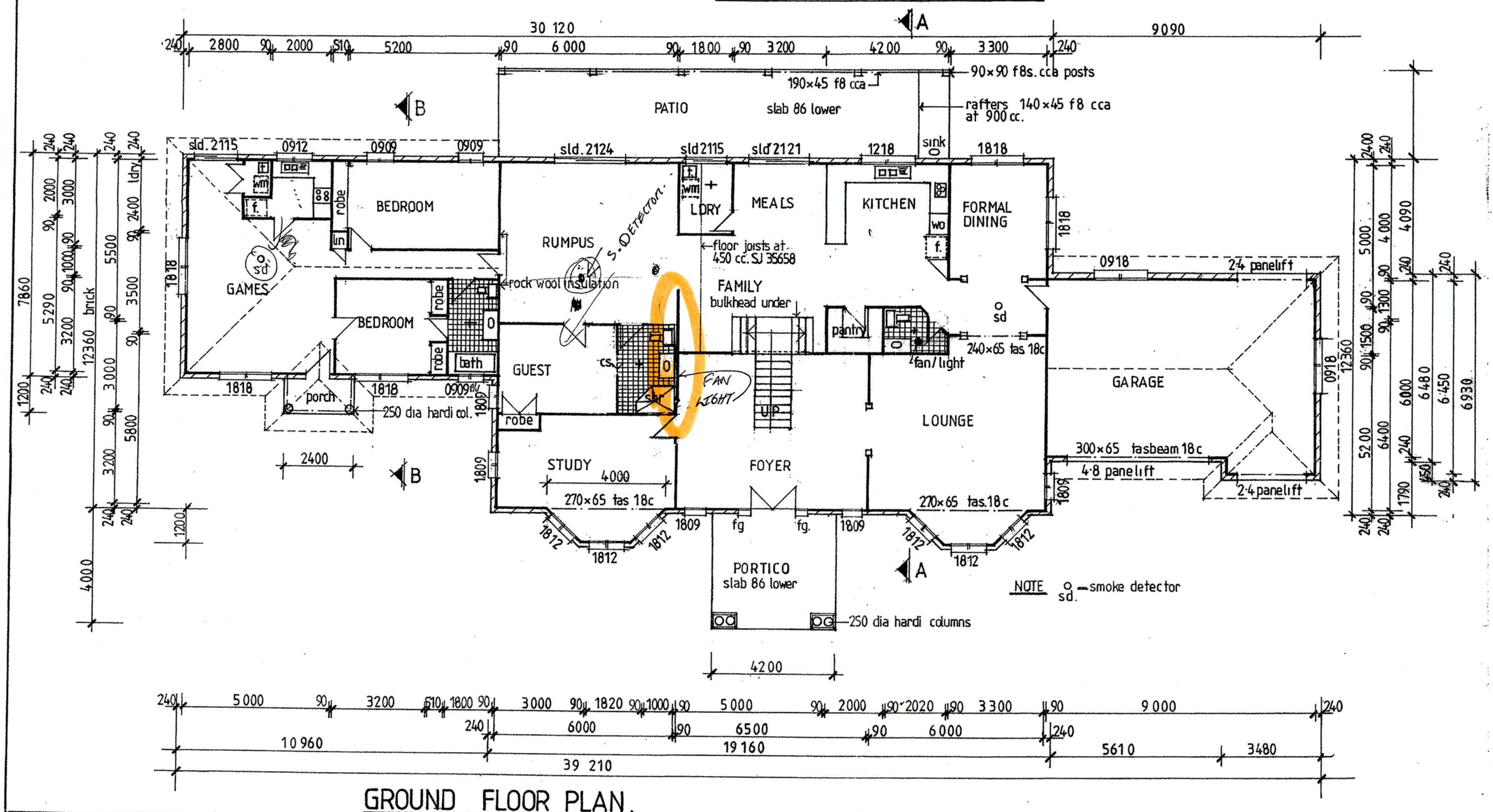

GROUND FLOOR PLAN.

GENERAL NOTES.

1) Written dimensions to be taken in preference to scaling.(Do not scale)
2) Internal linings. Ceilings 13mm. Gyprock walls 10mm. Gyprock. Wet areas 6mm. Villaboard.
3) WC. doors to be fitted with lift off hinges.
4) Laminated beams tasbeam 18c
5) Roof trusses & beams to be designed by truss man'fts.
6) Wall Framing f8.seasoned.

studs at 450 c/c and Nogging	external not notched	internal not notched
	90×35	90×35
Top pl	2/90×35	90×35
Bott. pl	90×35	90×35
Opening	lintel f8s.	studs at openings.
900	120×45	1/90×35
1200	140×45	2/ "
1500	190×45	2/ "
1800	190×70	2/ "
2100	240×70	2/ "
2400	240×70	3/ "

7) Wet areas to comply with F1.7 of the B.C.A.
8) Termite protection to be in accordance with A.S.3660.1/95 Treatment to be Dursban.

PROPOSED RESIDENCE

CLIENT Z. AZIZ

SITE ADDRESS Lot No 187 BENHIAM STREET CALAMVALE

Qld.

REF. Lot No 187 on RP 92598 Parish Yeerongpilly area 1022 ha.

Designed in accordance with the Building Act 1975-1992 and the BCA.

WIND FORCE 33 mps.

DATE 23·8·99

SCALE 1:100 1:200

SHEET NO. 1 of 5

AREA. Living 385 m² Portico 16·8m² Patios 49·08m²

BOB BALDWIN
DESIGN DRAFTSMAN
OBSA lic no. 65592
1043 Rochedale Rd, ROCHEDALE
Ph. 3341-7076.

7

AUSTRALIAN BUILDING CODES CERTIFICATION

RECEIVED
- 9 NOV 1999
DRS CUSTOMER SERVICE AREA
SOUTH

ASSESSMENTS MANAGER
LOCAL GOVERNMENT AREA
BRISBANE CITY COUNCIL

Dear Sir or Madam:

Please find attached, one copy of the following documents, submitted pursuant to section 4.3.5 of the Integrated Planning Act.

1 *The application*
2 *The plans, drawings specifications and other documents and information lodged by the applicant, including structural documentation, stamped approved or otherwise endorsed by me*
3 *Certified information given by competent persons and relied on by me (to be lodged after final inspection)*
4 *My accreditation as a private certifier*
5 *The decision notice*

The lodgement fee is to be debited to our account. 66710

Please quote our Reference no: 99/10219

Yours sincerely

Private Certifier

BUILDING AND PLANNING CONSULTANTS
THE HOME AND BUILDING DISPLAY CENTRE
Cnr Old Chatswood Rd & Pacific Highway
Springwood Qld 4127
Phone: (07) 3808 7900 Fax: (07) 3808 4450

David Biles Marty Koskinen Greg Rust

6

BSA
BUILDING SERVICES AUTHORITY

CERTIFICATE OF ACCREDITATION
BUILDING CERTIFIER

{issued under the Building Act 1975}

This is to certify that

DAVID CHRISTOPHER BILES

has been accredited at the level

Building Surveyor

With endorsement as a Private Certifier

and
for a period of one year from date of approval

A74336
Accreditation Number

01 June 1999
Date of approval

6

COUNCIL COPY

Development Application Check sheet

Integrated Planning Act 1997 (IPA) s 3.2.1

AUSTRALIAN BUILDING CODES CERTIFICATION

Thank you for choosing Australian Building Codes Certification for your building approval. To assist us to expedite the application please use this check sheet to keep track of all the required documents you must provide.

Item Required	Your Check ✔
1. Portable Long Service Levy form (Nil payment under $80,000).	
2. Signed and imprinted copy of contract (QBSA purposes).	
3. 2 copies Signed and completed application IDAS form (Please complete relevant sections).	
4. Consent from Body Corporate (where applicable).	
5. Owner's authority to lodge – signed.	
6. Minimum 4 copies of plan *A3 size paper (1 additional floor plan, elevations & site plan when ABCC is obtaining plumbing permit)*	
7. Please ensure plans have all relevant required information – drawn to scale, contours, boundary setbacks, cut/fill line, method of termite control, storm water disposal, cross over location, sewer location (complete with jump up details), bracing details, timber list, lintel sizes, lot details, heights of floor/ceiling and any other details required.	
8. 3 copies of signed soil test report.	
9. 3 copies of footing/slab design.	
10. 3 copies Engineer's structural design certificate.	
11. Copy of sewer location plan if available	
12. This check sheet.	

Completion of the checksheet appraisal provides the shortest possible time frame we can assess your application. During this assessment it may be found that a relaxation of boundary setback clearance, height relaxation, Town Planning input, or other conditions may be required and this may delay approval. You will be notified if this is the case.

OWNERS AUTHORITY

This authorises Australian Building Codes Certification to lodge applications as necessary with the Local Authority for development permits under the Integrated Planning Act 1997

Z. M Bowler

Owners signature

BUILDING AND PLANNING CONSULTANTS
THE HOME AND BUILDING DISPLAY CENTRE
Cnr Old Chatswood Rd & Pacific Highway
Springwood Qld 4127
Phone: (07) 3808 7900 Fax: (07) 3808 4450

David Biles Marty Koskinen Greg Rust

Notice of Engagement as Private Building Certifier

Integrated Planning Act 1997

COUNCIL COPY

AUSTRALIAN BUILDING CODES CERTIFICATION

Assessment Manager
Brisbane City Council
69 Ann Street
Brisbane Qld 4000

Dear Sir/Madam

Pursuant to section 5.3.9 of the Integrated Planning Act, I hereby notify you that I have been engaged as the private certifier for the building work required to be assessed under the Building Act, on the following project.

PROPERTY DESCRIPTION: LOT 187 BENHEAM ROAD, CALAMVALE

OWNERS NAME: DR ZAKAKIA BOULES & JIHAL AZIZ

DEVELOPMENT DESC: Carry Out Building Work – Development Permit for the Carrying out of Building Work

DATE OF ENGAGEMENT: date 27-10-99

NAME OF CERTIFIER: D Biles A74336 ~~M Koskinen A81402~~ ~~G Rust A81858~~

Signature: _____

Local Government Acknowledgement

I acknowledge receipt of the above documentation.

Officer's name _____

Date _____

Australian Building Codes Certification
Suite 196/236 Hyperdome
Loganholme Qld 4129

Telephone (07) 3287 7514 Fax (07) 3287 7717

99 10-219

4

COUNCIL COPY

Form 1A – IDAS Development Application

Integrated Planning Act 1997 (IPA) s 3.2.1

This form MUST be used for all development applications under the IPA, including those involving assessment under the Building Act 1975 and under the Environmental Protection Act 1994. It may be used for plumbing and drainage work under the Sewerage and Water Supply Act 1949.

Mandatory information items 1 – 13 Refer to the Explanatory Notes before completing.

AUSTRALIAN BUILDING CODES CERTIFICATION

THE HOME AND BUILDING DISPLAY CENTRE
Cnr Old Chatswood Rd & Pacific Highway
SPRINGWOOD QLD 4127

Telephone: (07) 3808 7900
Fax: (07) 3808 4450

1. Applicant details

Name *in full*
KELLY HARVEY

Company name *if applicable*
CENPLEX CONSTRUCTIONS

Postal address
P.O. BOX 491
SUNNYBANK HILLS

Phone no. 3711 4142
Fax no. 3711 4143

E-mail

Signature Applicant X Date

Signature ABCC Date

Signature Australian Building Codes Certification

Agrees to provide services for Private Certification in accordance with Section 5.3.9 of the Integrated Planning Act 1997 to the applicant. For the purpose of this agreement services include receive, assessment, decision and inspections as specified in the quotation.
Fee confidential as per quotation.

2. Property description

Street address *(no, street, suburb & postcode)*
LOT 187 BENHEIAM ROAD CAMAMULLE
Postcode 4116.

Shop/tenancy no *(if applicable)*

Level *(if applicable)*

Lot 187
RP/GTP/BUP/CP no. 92598

Council Area
BRISBANE CITY COUNCIL

If plan not sealed supply previous
Lot
RP/GTP/BUP/CP no.

3. Owner Consent

If applicant is not the owner (Tenants must have Landlord's consent) This authorises ABCC to lodge applications as necessary with the Local Authority for development permits under the Integrated Planning Act 1997

Name in full DR. ZAKARIA BOULES JIHAN AZIZ.
Address 12 LAKELEAW COURT
RUNCORN Postcode 4113.

Signature, Company seal or ACN
REFER ATTACHED.

4. Application and approval type

What do you consider describes the aspect/s of development applied for and the approval/s sought?

	Development Permit	Preliminary Approval
Carrying out building work	☒	☐
Carrying out plumbing or drainage work	☐	☐
Carrying out operational work	☐	☐
Making a material change of use of premises	☐	☐
Reconfiguring a lot	☐	☐

5. Building work

Is this an application for building work requiring **assessment under the Building Act**?

No ☐

Yes ☒ Complete the following

New work ☒ Alterations ☐ Demolition ☐

What is the total value of the building work?
Estimated value including all labour and materials.

$ 289,400

Construction details

External walls

Double Brick ☐ Brick veneer ☒ Stone, concrete ☐

Fibre cement ☐ Timber ☐ Curtain glass ☐

Steel ☐ Aluminium ☐ Other ☐

Frame

Timber ☒ Steel ☐ Aluminium ☐

Other ☐

Floor

Timber ☒ Concrete ☒ Other ☐

Roof Covering

Tiles ☒ Slate Concrete ☐ Fibre cement ☐

Steel ☐ Aluminium ☐ Other ☐

No. of storeys

2.

Floor area – m^2

New	Existing	TOTAL
450		450

Complete for residential work only
What best describes the dwelling type?

Single detached house ☒

Kit house ☐

Transportable/relocatable house ☐

Attached housing *includes row, terrace, townhouse* ☐

Semi-attached housing *duplexes, dual occupancies* ☐

Apartment building/unit where units are layered one above another ☐

Apartment, unit or flat attached to an existing house ☐

No. of existing dwelling Units

No. of dwelling units to be demolished

No. of new/additional self Contained dwelling units

If dwelling unit, gross area of site

M^2

What is the Local Authority's zoning of the land?

Is the Land encumbered by a plan of development or building envelope?

No ☐

Yes ☐

Is the land subject to flooding?

No ☐

Yes ☐

Is the land subject to contamination?

No ☐

Yes ☐

Is the land in a declared slip zone?

No ☐

Yes ☐

Is the land in a tree preservation area?

No ☐

Yes ☐

Release of building work information
Some local governments provide summary information of approvals, including the owner's name and address, for use by industry in marketing products.

Does the owner agree to the release of owner details and the street number of the site for marketing purposes?

No ☒

Yes ☐

6. Superseded planning scheme

Only applicable if assessment of the application is required under a planning scheme. Tick 'no' if not applicable

Do you wish the application to be assessed under a superseded planning scheme?

No ☒ **Go to 7**

Yes ☐ Provide details, which will identify the superseded planning scheme under which assessment is sought or development is proposed

Planning scheme

Date adoption notified in Gazette

7. Builders Details *(if not the same as applicant)*

Name

REFER APPLICANT

Postal address

Postcode

Phone no.

Fax no.

Builders Licence No:

076981

8. Copyright consent

Not applicable to plumbing and drainage work or building work assessed only under the Building Act

Is copyright consent applicable to this application?

No ☒ **Go to 9**

Yes ☐ Attach copyright holders names and their written consent for reproduction of relevant materials *ie authors of reports, plans and other supporting information*

9. Existing use of premises and description of proposed development

eg. Addition to house, new shops to replace service station

Refer Explanatory Notes

If insufficient room attach additional information.

NEW DWELLING

10. Referral trigger

Refer Explanatory Notes

Do you consider this application triggers **referral coordination** of information requests?

No ☒

Yes ☐

Do you consider this application triggers **referral to a referral agency**?

No ☒ **Go to 11**

Yes ☐ specify each trigger *eg. ERA, special fire services*

Specify each referral agency indicating whether a concurrence or advice agency *eg. Dept of Environment (concurrence), QLD Fire & Rescue Authority (advice)*

If a referral response has already been received from a referral agency, indicate the agency and attach the response

11. Plans and supporting information

Plans and supporting information are required to illustrate the intent of the proposal.

Are plans and supporting information attached?

No ☐

Yes ☒

If plans and supporting information are attached, do they include any plans or supporting information recommended by a referral agency?

No ☒

Yes ☐

No supporting information recommended ☐

Note:

1. *For building work that is to be assessed under the Building Act, plans and supporting information must be submitted that comply with schedule 1 of this form.*
2. *If the Queensland Fire and Rescue Authority is a referral agency for the application, and plans and supporting information are supplied that comply with schedule 1, applicants should answer "yes" to the second part of the question, as schedule 1 includes the Authority's requirements.*

12. Reconfiguring a lot

Is this application for **Reconfiguring a lot?**

No ☒ **Go to 13**

Yes ☐ Specify the total area of land involved in this application

ha/m^2

Office use only

Census district no. | QBSA insurance receipt no

Owner/builder ☐No ☐Yes | Approval no

13. Plumbing and drainage work

Is this an application for plumbing or drainage work requiring **assessment under the Sewerage and Water Supply Act?**

No ☒ **Go to 14**

Yes ☐ Complete the following

Water supply plumbing

Is this application for a new water service?

No ☒

Yes ☐ include a site plan with the application showing the location of the proposed driveways

Purpose of water service

Domestic ☐ Commercial ☐ Industrial ☐

Fire ☐ Other ☐

Nature of work

New ☐ Repair ☐ Alteration ☐

Disconnect existing service ☐ Other ☐

Size of water service required

mm

Type of backflow prevention device *if applicable*
Attach list if necessary

Sanitary plumbing and drainage

Nature of work

Alter an existing installation ☐ New/additional sewer connection required ☐

Disconnect existing service ☐ Other ☐

On-site sewerage facility

On-site sewerage Treatment plans ☐ Type

Septic Tank ☐ Method of Disposal

Sullage ☐ Method of Sullage Disposal

Plumbing/drainage plan

Do you want the Council to prepare the design?

No ☒

Yes ☐

Is the design submitted for approval?

No ☒

Yes ☐

Office use only Drainage Plan No

Number of new fixtures to be installed

Sinks | Basins | Laundry tubs

Showers | Baths | W.C.s

Urinals | Other

Total number of new fixtures

14. Fire fighting facilities

Refer Explanatory Notes

Is this an application for building work requiring fire safety installations or special fire services?

No ☒ **Submit application**

Yes ☐ Indicate which fire safety installations or special fire services are required

Special fire services

Fire mains ☐

Fire hydrants ☐

Sprinklers (including wall-wetting sprinklers) ☐

Special automatic fire suppression systems (including foam, deluge and gas flooding systems) ☐

Fire detection and alarm systems (other than stand alone smoke alarms not required to be interconnected or connected to a fire indicator panel ☐

Fire control centres ☐

Stairwell pressurisation systems ☐

Smoke exhaust systems ☐

Emergency warning and intercommunication systems ☐

Emergency lifts ☐

Vehicular access for large isolated buildings ☐

Services provided under conditions imposed under Standard Building Regulation section 71 ☐

Services required under clause E1.10 of the Building Code of Australia ☐

Fire safety installations (other than special fire services)

Structural features

Access panes through fire-rated construction ☐ Penetrations through fire-rated construction ☐

Fire dampers ☐ Fire curtains ☐

Fire windows ☐ Structural fire protection ☐

Fire shutters and doors ☐

Fire protection systems

Air handling systems ☐

Fire fighting equipment

Fire extinguishers (portable) ☐ Fire hose reels ☐

Fire hydrants (including hydrant boosters) ☐

Occupant safety features

Exit door hardware ☐ Emergency lighting ☐

Emergency Power supply ☐ Fire doors ☐

Solid core doors ☐ Smoke proof doors ☐

Exit signs ☐

EAST COAST
GEOTECHNICAL PTY. LTD. ENGINEERING CONSULTANTS
ACN 065 058 095

3/246 EVANS ROAD, SALISBURY Q 4107
P.O. BOX 404, SALISBURY Q 4107

Ph: (07)3875 1933
Fax: (07)3277 7746
E-MAIL: manager@eastcoast-geotech.com.au
WEB SITE: www.eastcoast-geotech.com.au

GOLD COAST
Ph: (07)5529 2329
Fax: (07)5529 2182

FILE COPY

18th October, 1999

Enquiries to: Adam Rizzardini

CLIENT: **Steve Bayet**
59 Rowlands Street
SLACK CREEK Q 4127

PROJECT: **No 187 Benhiam Road**
CALAMVALE UBD:220/D-20

REF NO: **9A1607**

COMMISSION: Footing recommendations in accordance with A.S. 2870.

SITE INVESTIGATION:

We have studied the following site investigation report

Company: Saunders & Partners P/L
Date: 14 May, 1999
Job No: 99.1288

This report classifies * this site as Class "S/M" in accordance with Section 2 of A.S. 2870 – 1996.

The attached design has allowed for the influence of the proposed earthworks described in our "Site Preparation" details.

The budget for this report did not extend to our being commissioned to carry out a site investigation.

ENGINEER CERTIFICATION:

As the signatory of this report is a Registered Practicing Engineer in the State of Queensland and N.P.E.R-3, the footing recommendations in this report take precedence over all other drawings pertaining to this report.

The only other documents that can take precedence over this report are those with a later date signed by this author, or those signed by another R.P.E.Q. or N.P.E.R.-3.

PREAMBLE:

Both the builder and the potential owner/occupier of the proposed dwelling should be aware that the satisfactory performance of the footing system for the life expectancy of the structure is dependent on several factors.

The three most significant factors include: the compatibility of the proposed footing system to the soil conditions, the ability of the builder (or his agent) to construct the footing system in accordance with our guidelines as well as in accordance with good building practice, and finally **the ability of the owner/occupier to maintain the structure and its surrounds (i.e. garden areas) in a sensible and responsible manner.**

This report must be read and considered as a whole i.e. all of our recommendations, foundation sections and appendices must be read, considered and followed by all people involved in this project to ensure adequate long term performance of the footing system and the structure it supports. If soil conditions vary from that indicated in the report, this office must be notified to assess the suitability of the proposed foundations.

SITE PREPARATION DETAILS:

We recommend scraping this site free of all significant organic material and debris, then cut and fill (if required) to form a level construction pad. Fill should be clean compacted spoil from the site cut or imported if necessary. This fill must have reactivity levels less than that of the soils encountered during testing and must be free of obstructions which will hinder the proposed footing excavations. This fill must be laid down in 150mm (max) layers with an excavator and compacted by repeat rolling as per A.S. 2870 – 1996 Section 6.4.2.

These earthworks must incorporate a small surface spoon drain with an efficient outflow in the base of the cut. If a significant catchment exists up-slope from the construction area, it may also be necessary to construct a cut-off trench on the high side of the cut.

The following design assumes that the cut/fill line is within 300mm of the position shown on our foundation plan.

BUILDING AND SITE DESCRIPTION:

The proposed development is the construction of a highset residential dwelling.
The perimeter walls will be articulated brick veneer.
The internal walls will be timber framed.
The preferred flooring system will be a waffle raft.

UNDERGROUND SERVICES:

At the time of writing this report we had not been informed of the location of any underground services. If any services do exist on-site they must be located and our office informed so that, if requested, a re-design of the footing system can be performed.

ARTICULATION:

All masonry walls require full height articulation at a maximum spacing of **8 metres** i.e. the masonry must be discontinuous from the footings to the eaves. If a rendered or painted finish is to be used articulation spacing is to be reduced to 5.5 metres.

This articulation is essential to minimise the effects of brick growth or block shrinkage, thermal expansion and soil movements. Methods of articulation are fully explained in Technical Note 61 produced by the Cement and Concrete Association. Copies of this publication are available from our office on request.

FOOTING SPECIFICATIONS:

Piers:

We recommend establishing a series of 450mm diameter piers in the positions shown on the attached layout. These piers must be founded at the following levels:

"300MM INTO NATURAL MEDIUM DENSE SILTY SAND"

Levelling Layer:

This is the most important part of the preparation as it ensures that the waffles are accurately placed. This layer must be level and all step-downs clearly catered for. Where slab piers are required, the top of the piers must be clear of soil so that the beams will be supported directly on it.

Waffle Raft:

Stem Widths:

When the waffles are being placed, it may be more practical to increase the stem widths, than use partial waffles (particularly in and around the plumbing). It is permissible to increase these stem widths to a maximum of 440mm, however where the stem width exceeds 150mm, additional reinforcement as per the following table is required (equally spaced).

Stem Width (mm)	Additional Top Steel	Additional Bottom Steel
151 to 220	1 x Y12	2 x Y12
221 to 330	2 x Y12	3 x Y12
331 to 440	3 x Y12	4 x Y12

Concrete Specifications:

All concrete shall have a minimum 28 day strength of 20 Mpa unless notified otherwise. All concrete must be adequately compacted. Mechanical vibration and curing of slabs is strongly recommended.

CONTROL JOINT IN WAFFLE POD SLAB

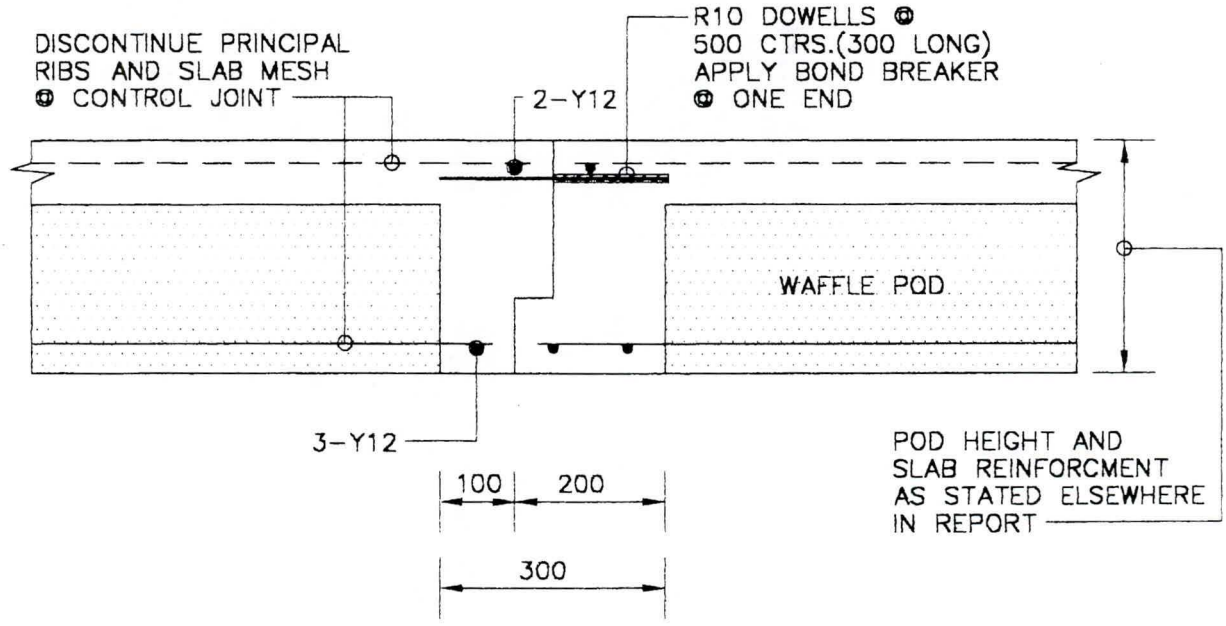

EAST COAST GEOTECHNICAL P/L

TYPICAL SECTIONS (WAFFLE POD TYPE 1V)

REF No. 94/

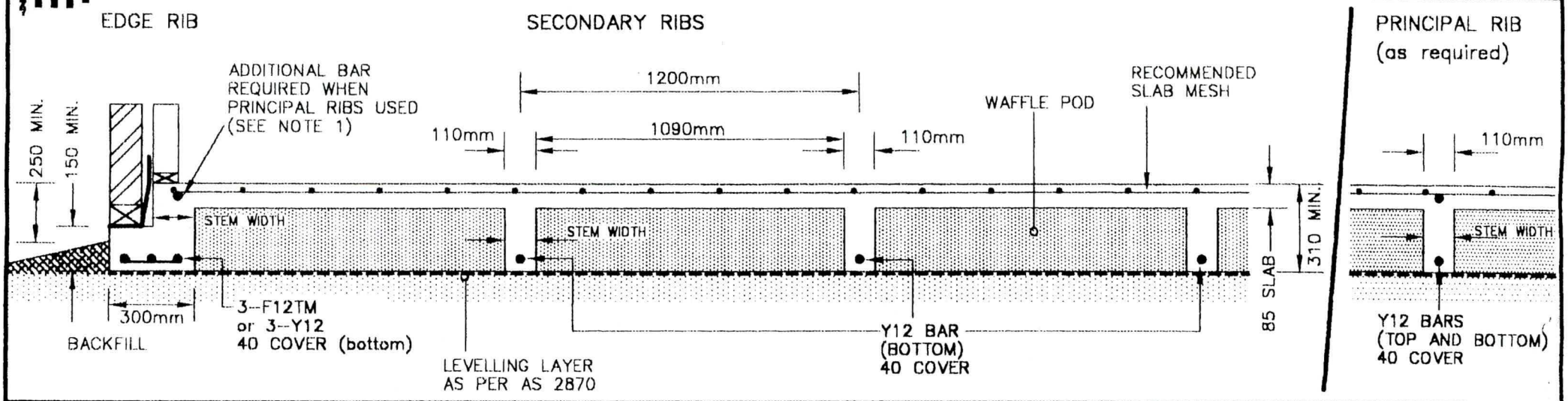

STEPDOWN

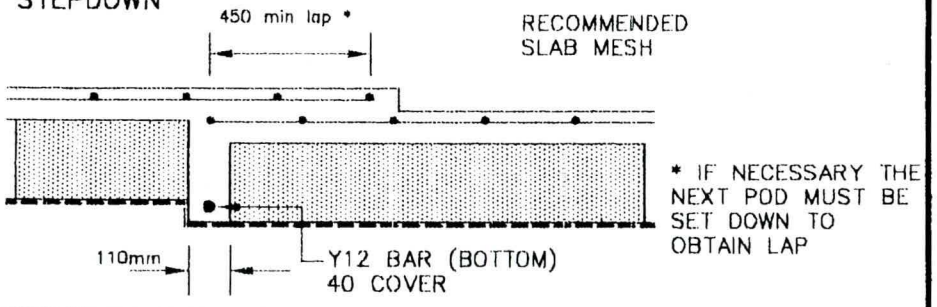

VERANDAH EDGE RIB

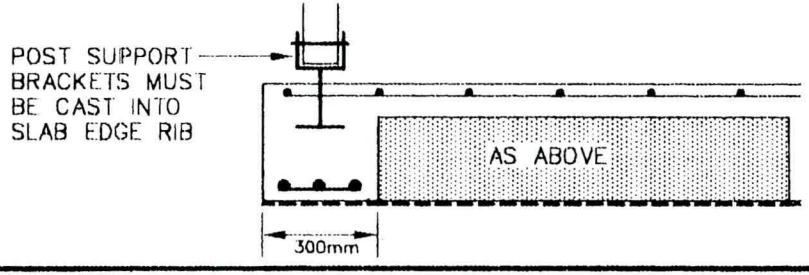

Additional Reinforcement where STEM WIDTH exceeds 150mm.

STEM WIDTH (mm)	ADDITIONAL TOP STEEL	TOTAL BOTTOM STEEL
151 – 220	1 X Y12	2 X Y12
221 – 330	2 X Y12	3 X Y12
331 – 440	3 X Y12	4 X Y12

NOTES:

1. **Principal Ribs** are required in piered area – extra Y12 bar required in top of edge rib (tied to slab mesh) and every third rib in grid pattern over piers. Futhermore, an additional top bar must be incorporated around the perimeter in the area of the principal ribs.
2. Where **stem width** exceeds 150mm additional reinforcement as per the table provided in this detail and in the footing specifications is required.
3. **Trench mesh** does not require corner bars. Trench mesh must be lapped the width of mesh at corners and 500mm in running direction.
   Where the internal rib bottom bar meets the trench mesh the Y12 bar must extend to the outside trench mesh bar. i.e. 200mm (no corner bars)
4. **Slab Fabric Laps**
   The fabric is to be lapped 225mm.
   No more than two sheets are to be lapped.
   Where there are more than two sheets, the fabric is to be abutted and Y12 bars (1000 long @ 400 ctrs) are to be tied to the underside of the join.
   These bars are to be central across the join.
5. **Termite Treatment:** Structure must be protected from subterranean termites as outlined in AS 3660.1–1995.

MODIFICATION WHERE PIPE PENETRATES RIB

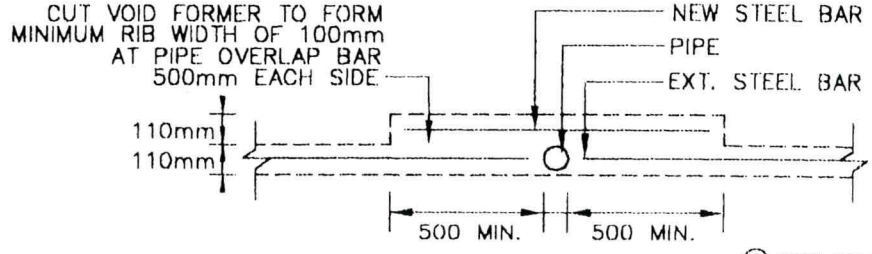

© EAST COAST GEOTECHNICAL PTY. LTD.

COPY

PENETROMETER (D.C.P)

No. OF BLOWS	HOLE 1	HOLE 2
00 - 200		4
200 - 400		4
400 - 600		5
600 - 800		6
800 - 1000		5
1000 - 1200		8
1200 - 1400		10
1400 - 1600		
1600 - 1800		
1800 - 2000		
2000 - 2200		
2200 - 2400		
2400 - 2600		
2600 - 2800		
2800 - 3000		

PENETROMETER (D.C.P)

No. OF BLOWS	HOLE 3	HOLE 4
00 - 200		
200 - 400		
400 - 600		
600 - 800		
800 - 1000		
1000 - 1200		
1200 - 1400		
1400 - 1600		
1600 - 1800		
1800 - 2000		
2000 - 2200		
2200 - 2400		
2400 - 2600		
2600 - 2800		
2800 - 3000		
3000 - 3200		
3200 - 3400		

BORE LOGS

BOREHOLE 1 BOREHOLE 2 BOREHOLE 3

SITE SKETCH (N.T.S.)

BENHIAM ST

LABORATORY TEST RESULTS

BOREHOLE No.		1	
DEPTH (mm)		1500	
Iss		1.44	
MOISTURE CONTENT %	SHRINK SWELL	INITIAL	9.2
		INITIAL	11.2
		FINAL	12.5

NOTE:
ALL DIMENSIONS SHOWN ARE APPROXIMATE ONLY.

SAUNDERS & PARTNERS PTY. LTD
ACN 010 741 249
CONSULTING ENGINEERS, STRUCTURAL & CIVIL
9/10-12 WATKINSON STREET NERANG, QLD. 4211
TELEPHONE, (07) 5596 0211 FAX (07) 5596 0255
EMAIL

SOIL TEST RESULTS
LOT 187 BENHIAM STREET
CALAMVALE

SCALE N.T.S	DATE 14/05/99
DRAWN JA	
JOB No. 99.1288	DRG. No. 01
CHECKED	SHEET 1 OF 1

9A 1604

COPY

SAUNDERS & PARTNERS PTY LTD
CONSULTING ENGINEERS CIVIL & STRUCTURAL

FACSIMILE TRANSMISSION (Original documents will not follow)

TO: CLARENDON	FROM: RUSSELL BINSTEAD
ATTN: SHARON	NO. PAGES INCLUDING THIS SHEET: 2
FAX No: AUTO.	DATE: 16-8-99

SITE ADDRESS: LOT 187 BENHAM STREET, CALAMVALE.
YOUR CLIENT: BOWES & ZAH
OUR REF: 99.1288

1. SITE CLASSIFICATION

S *Slightly Reactive*	☐	S/M *Slightly to Moderately Reactive*	☑
M *Moderately Reactive*	☐	M/H *Moderately to Highly Reactive*	☐
H *Highly Reactive*	☐	H/E *Highly to Extremely Reactive*	☐
E *Extremely Reactive*	☐	P * *Problem Site (Refer Notes Below)*	☐

* COMMENTS ON "P" CLASSIFICATION (IF APPLICABLE)

- The following footing & slab piering requirements apply when all new fill used to create a level building platform is compacted in accordance with AS1289 tests 5.1.1 & 5.3.1.
- Allowance should be made for piers to footings adjacent to filled retaining walls, canal embankments, underground services, etc.

2. ARE FOOTING PIERS REQUIRED ? ☐ Yes ☑ No

FOUNDING MATERIAL FOR FOOTING PIERS

☐ Firm Natural Ground ☐ Firm Existing Ground ☐ Weathered Rock

3. ARE SLAB PIERS REQUIRED ? ☐ Yes ☑ No

FOUNDING MATERIAL FOR SLAB PIERS

☐ Firm Natural Ground ☐ Firm Existing Ground ☐ Weathered Rock

4. WIND CLASSIFICATION ?

☐ W33N ☑ W41N ☐ W50N

Suite 3, 19 Mayneview Street, Milton Qld 4064. Phone: (07) 3367 0211 Fax: (07) 3367 0205
A.C.N. 010 713 248

COPY

REPORT LIMITATIONS
DESIGN

This report has been signed in blue ink. If the signature on this report is in black ink, you are reading a photocopy.
This report may be copied in full. If any doubt exists to the number of pages in the reports, we should be consulted to compare this report with our master copy which is kept in our office.

In all of our design work we have interpreted a load bearing wall as defined in Section 1.7.30 of A.S.2870 - 1996. Therefore, conventional single storey houses **do not** have internal load bearing walls and in high-set houses, only walls which transmit a force of >10 kN/m to the slab and/or footings are interpreted as being load-bearing. In our designs we detail a slab thickening because of our interpretation of the load bearing wall requirements and/or because of the site conditions - i.e. soil reactivity.

We do not detail slab thickenings to conform to wind bracing, as assessment of the wind bracing is beyond the scope of this report. However, in the case where a bracing wall is to be bolted to a slab, and the wall is not located over a slab thickening, the slab is to be locally thickened in the area of the proposed bolts. In accordance with manufacturers specifications.

If the attached design is a ground slab, unless otherwise specified the design assumes that hard floor tiles will be restricted to conventional wet areas i.e. bathrooms and laundries.

The recommendations contained in this report have not taken into consideration the long-term effects of any previous, current or potential subsurface work by mining companies or potential slope instability problems. At the time of writing this report, neither our client (nor his agent) nor the local authority had made us aware that these problems may be affecting this allotment. If a mining subsidence or slope stability assessment is required for this allotment to obtain building approval, we can arrange for this to be done, but that type of report is beyond the scope of our commission and fees in this report.

Under normal circumstances the soil profiles reported in our Site Classification Section should be representative of the soil conditions over this site, however in some cases, soil conditions can change dramatically over short distances, therefore even careful exploration programmes may not locate all the variations. If footing excavations reveal soil conditions differing from those shown in the attached report, we recommend that we be immediately notified so that further exploration can be carried out and the designer of the footings then notified to consider the influence of the changes to the design.

In writing this report, we have also considered all the information supplied to us by our client. Should the client or his agent have omitted to supply us with relevant information, our report may be irrelevant and/or inappropriate. We do not take responsibility for the consequences in such cases and we will make an additional charge if as a result, more testing or re-writing of the report is necessary.

If we are commissioned to inspect any footing excavations or slab preparations on this site, **then 24 hours notice is required.** At this inspection, if we form the opinion that site preparations are different from the criteria on which we based our recommendations, then the client must be prepared to vary the design at our request and pay any reasonable costs incurred.

All concrete and the placement of concrete and reinforcement must conform to the relevant sections of Section 6 of A.S. 2870.
All concrete shall not be less than 20 MPa grade with 20 mm. (less if concrete is to be pumped) nominal maximum aggregate size (N20 grade).

The recommendations contained within this report are in accordance with our interpretation of the relevant building codes. Therefore, providing that all our recommendations are adhered to, the attached engineer designed footing system will give adequate performance for the life expectancy of the structure, hence, if the reader of this report considers that certain sections require clarification, we are available for phone consultations during normal office hours. Any changes made to our recommendations by persons **unauthorized by this company** will legally be interpreted as that person assuming the responsibility for the long-term performance of the footing system.

The range of classification in A.S. 2870 (the most severe is Class E) is as follows:

Predicted surface movement	Class
Ys = 0-10	A
Ys<20 mm.	S
Ys=20-40 mm	M
Ys=40-70 mm.	H
Ys>70 mm	E

A.S. 2870 also has a Class P for problem sites.

APPENDIX I
GENERAL BUILDING RECOMMENDATIONS

Our appendices I, II and III summarize the relevant parts of Section 5 & 6 of A.S. 2870. The C.S.I.R.O. have also produced a guide for homeowners entitled "Guide to Homeowners on Foundation Maintenance and Footing Performance" by P.F. Walsh. This document is similar to Appendix B & C of A.S. 2870 and is in our opinion easier to read. All of the above literature is available from our office upon request.

Our client must be made aware that our attached design is also reliant on reasonable long-term management and if our client is not the future owner, then it is our client's responsibility to pass on this information. Furthermore, the more severe the site classification, the more important site management is in achieving adequate performance out of a footing system.

Correct drainage is a most important part of our recommendations and design. If the site is not prepared correctly, excessive soil moisture may accumulate in some areas, which may lead to wall and/or floor movements. In general, the soil surface should be sloped away from the building at approximately 1:20 for a minimum width of 1200 mm. In high rainfall areas or where the original ground slope is greater than 1:10, an effective drainage system should be installed to divert the surface water away from the building area. In general , efficient spoon drains will be adequate. Roof water should be diverted away from the building as soon as possible. Where building delays occur, temporary downpipes may be necessary (refer attached "Typical Drainage Arrangement" sketch).

If the removal of pre-existing structure or vegetation disturbs the natural soil profile at the recommended foundation depths, then we recommend the local deepening of the footings to a minimum depth of 200 mm. below this level.

Unless stated oterwise in this report, or unless specified by other consultants, all relevant codes must be adhered to.

In Class M, H or E soil profiles (as well as some Class P sites) minor floor and wall movements are inevitable, therefore we make the following additional general construction recommendations to minimize their effects:

In some Class M sites and all Class H and E sites, a well articulated construction method must be adopted. Furthermore, Section 5 & 6 of A.S. 2870 should be consulted when designing the structure on these sites.

Avoid: large archways, wing walls that are attached to the main building walls, narrow isolated wall panels near corners and brickwork over doors and windows where possible.

Isolate the superstructure of extensions from the original structure to allow for differential movement but the floor systems must be pinned.

Arrange plumbing fixtures so that the slab and beam penetration is kept to a minimum and where necessary sleeved to allow for movement with closed cell polythene or similar material, as specified in Appendix VI - Service Penetrations. Where the penetration is within 150 mm. of the base of a beam or footing, the depth of this footing element should be deepened by approximately twice the diameter of the penetration. This clause is particularly relevant on Class M, H and E sites.

Particular attention should be given to all drainage and plumbing trenches so that they do not introduce water to the foundation soil, do not allow greater soil moisture evaporation and/or destabilize the footings. Specifically, any trenches under the floor or within 1.5 metres of the building should be sloed away from the house and should be back-filled with clay or weak mortar in the top 300 mm.

Deep excavations such as garages partly underground, cellars, indoor pools etc. will change the foundation clay moisture, therefore extra care should be taken to protect the soil moisture stability in the surrounding area.

Notwithstanding the recommendations made in this report, we also recommend that wherever footings are close to any excavation or easement, they should be deepened so that the projection from the underside of the excavation to the underside of the footings, make an angle not exceeding 30^0 in sandy soils and 40^0 in clayey soils (to the horizontal). We do not recommend using a steeper angle unless sufficient testing is carried out to indicate otherwise, or unless the footings in the relevant area are founded on or are very close to solid rock. Deep excavations close to existing footings must also comply with the above guidelines.
Where we have been made aware that an existing easement is close to the proposed structure, if the information supplied has sufficient detail, then our recommendations will clearly cater for the easement.

On Class M, H, E and P sites, external water taps should be over a grate or be positioned so that water spillage **will not** shed water onto the footings. The establishment of these grates is generally beyond the scope of a building contract.

On Class M, H, E and P sites if a rainwater tank (or similar) is to be sited within 6 metres of a structural footing, then we should be consulted.

APPENDIX II

OWNER'S RESPONSIBILITIES

The footings we have recommended require that the owner, builder or others do not allow the soil moisture content to alter significantly during the life of the building. **The owner/occupier is the only person who can maintain stable moisture conditions near the footings.** The following precautions are strongly recommended:

The ground surrounding the building site must be graded and drained so that water is shed away from the house area.

LONG TERM SITE MANAGEMENT

Trees or dense shrubs must be kept well away from the building. This distance depends upon the species and soil conditions, however a typical distance is three quarters the mature height or twice the mature "canopy" diameter, which ever is greater. Where there are a number of trees in line, this distance should be doubled.

Trees that are in a neighbouring property and are near the limits of these distances can be tolerated only if the soil near the building is protected from moisture changes.

All reactive soils should be protected from situations that may cause changes in moisture content.

Any watering regime should consider the whole yard and be aimed at maintaining a constant soil moisture content across the site.

In all types of soil conditions, if an automatic watering system is installed close to the footings - i.e. within 2.5 metres, instability problems may occur. Before installing such a system, we strongly recommend that the proposal be submitted to us for comment as additional precautions may have to be taken.

APPENDIX III

SITE DRAINAGE

To ensure that adequate site drainage is maintained during construction, where site cuts deeper than 250 mm. are made, the earthorks should incorporate a spoon drain, (with a suitable outflow) at the base of the cut. Furthermore, where delays in construction occur, it may be necessary to use temporary down pipes to ensure roof run-off does not contribute to on-site drainage problems.

TYPICAL DRAINAGE DETAILS

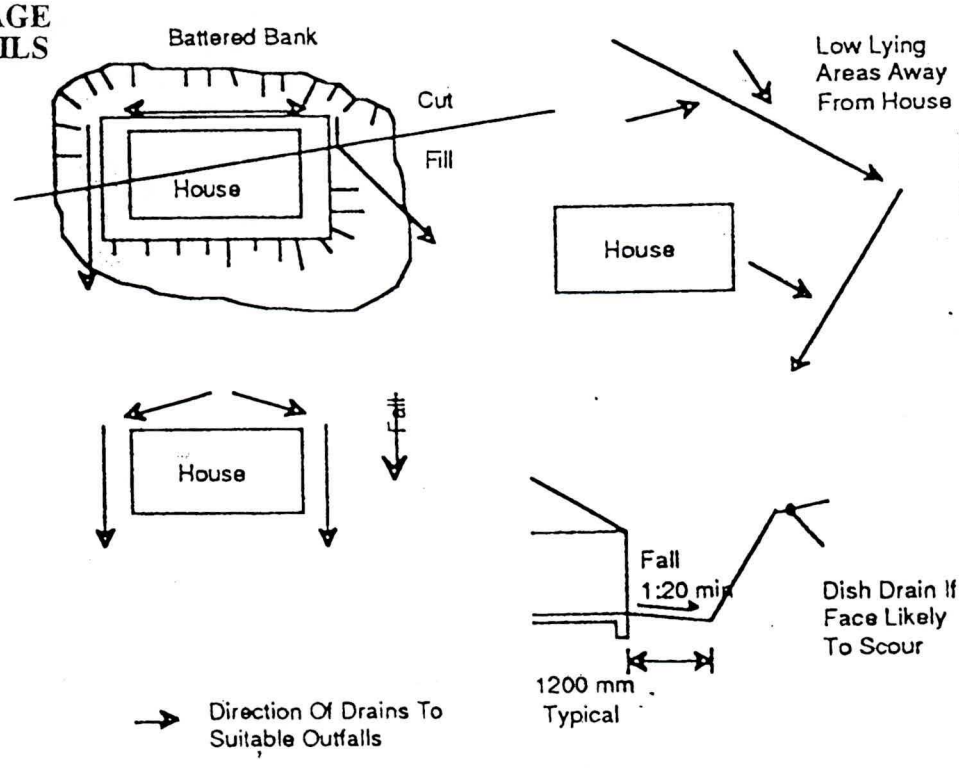

APPENDIX IV - DEFINITIONS

In our log section we describe filled ground as stated below. It must be remembered that when sampling boreholes, particularly in alluvial soils, some top soils and other soft natural soils are indistinguishable from fill, therefore can be logged as fill.

All sites with fill deeper than the limits prescribed in AS2870 have been classified as Class "P". A "Ys" (predicted surface movement) has also been supplied. The design engineer must make allowances for both possible limited bearing and reactivity affecting the footings.

CONTROLLED FILL

Fill which has been placed under supervision and at the time of writing this report we have received written certification from a Geotechnical Testing Authority that this fill complies with either Level 1 or 2 responsibility as defined in Appendix B of AS3798-1996.
Certification of fill as controlled must not be equated to STABLE conditions for foundation design. This certification is a statement of the quality of the fill and an assurance that it was placed in a professional manner. There are two parameters which influence footing design and they are the strength of the strata and the potential for the strata to change volume with changes in seasonal conditions.
These two parameters are of equal importance to the AS3798 certification. Where certification at a minimum of 95 % standard compaction has been achieved, we recommend adopting a safe bearing pressure for design purposes of 100 kPa. If certification is at a minimum 98 % standard compaction, we recommend increasing this safe bearing to 150 kPa.

UNCONTROLLED FILL

Fill other than controlled fill consists of many forms as follows. In all cases consideration should be given to design by engineering principles.

- *SUB-DIVISIONAL FILL*

In general, sub-divisional fill has all characteristics of controlled fill, except it has not been tested and documented in such a way to allow it to be certified in accordance with AS3798. In some cases the fill was placed prior to the advent of AS3798, in other instances, insufficient testing was undertaken to allow Level 1 or Level 2 certification. In most cases the fill will be suitable to support a raft slab.

- *CONSOLIDATED FILL*

This fill generally is formed as part of the house construction platform and is in our opinion sufficient to support the proposed slab panels of a residential slab, but inadequate to support loads transmitted by footings or edge beams, which must be piered down to suitable strata.

- *UNCONSOLIDATED FILL*

All slabs and footings in these filled areas must be piered or piled down to suitable levels in the more competant strata. This fill is also more prone to collapse during excavation, and allowances should be made for additional concrete volumes. This fill can also be considered uncontrolled fill.

- *UNSTABLE FILL*

This type of fill has a high void ratio and may undergo significant differential settlement under load and may settle under its own weight. In these areas piers or piles must be considered as the foundation medium and the attached log sections should be studied to see whether the fill contains material which may hinder drilling of piers or driving of piles (i.e. boulders, cobbles, concrete, pieces or other debris).

VIRTUALLY FLAT

Visually assessed as minor levelling only required to form a level construction pad.

GENTLY SLOPING

Visually assessed as having gradients less than 1:25 across the building area.

MODERATELY SLOPING

Visually assessed as having gradients in the order of 1:12 to 1:25.

STEEPLY SLOPING

Visually assessed as having gradients in the order of 1:5 to 1:12.

VERY STEEPLY SLOPING

Visually assessed as having gradients steeper than 1:5.

UNEXCAVATABLE ROCK

Any material which is similar to that described in Clause 1.7.47 of A.S.2870-1996...strong material including shaley material and strongly cemented sand or gravel that does not soften in water. Material that cannot **readily** be excavated by a conventional backhoe with a normal bucket* may be taken to be rock.

EXCAVATABLE ROCK

A rock-like material which does not shrink or swell with changes in soil moisture, but is readily excavatable with a conventional backhoe with a normal bucket.*
* *A rubber tyred machine similar in power to a Case 580 series using a bucket width similar to the designed trench width.*

GRAVEL

Coarse soil particles, larger than sand size, but less than 60 mm. in diameter.

ROCK FLOATERS

Pieces of rock in a soil profile larger than 60 mm. but can range up to well over a metre in diameter. Where these rock floaters form a layer or mat within the soil profile and difficulty is encountered in excavating them, subject to the geotechnical consultant, they may be taken to be the same as unexcavatable rock. For the purpose of this report cobbles and boulders are the same as rock floaters.

EAST COAST GEOTECHNICAL PTY. LTD.

APPENDIX VI
SERVICE PENETRATIONS

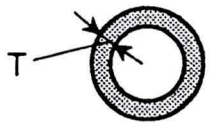

CLASS	LAGGING THICKNESS (T)
S,M,H	20
E	40

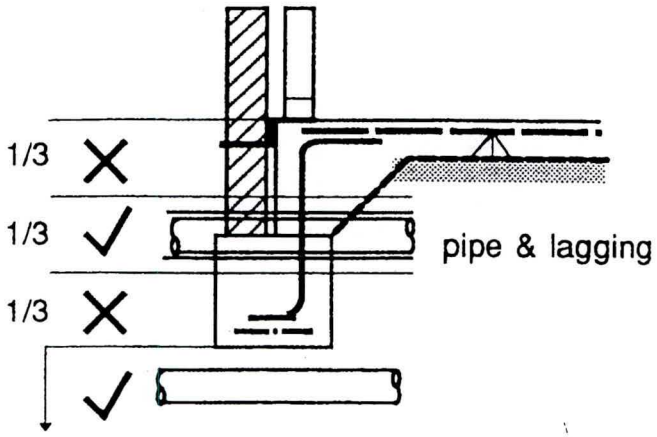

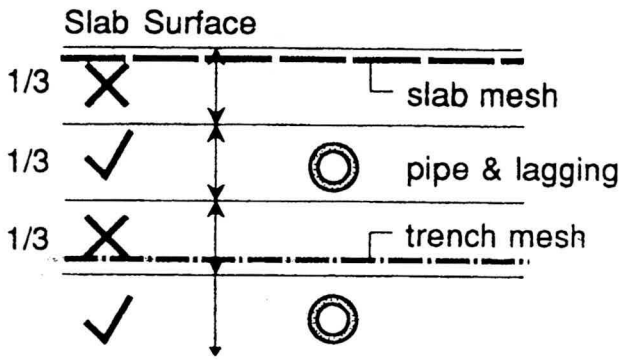

NOTE:- Service penetrations are permitted only through the middle third or beneath edge and stiffening beams. As illustrated above.

WHEN SERVICE PENETRATION COINCIDES WITH TRENCH MESH.

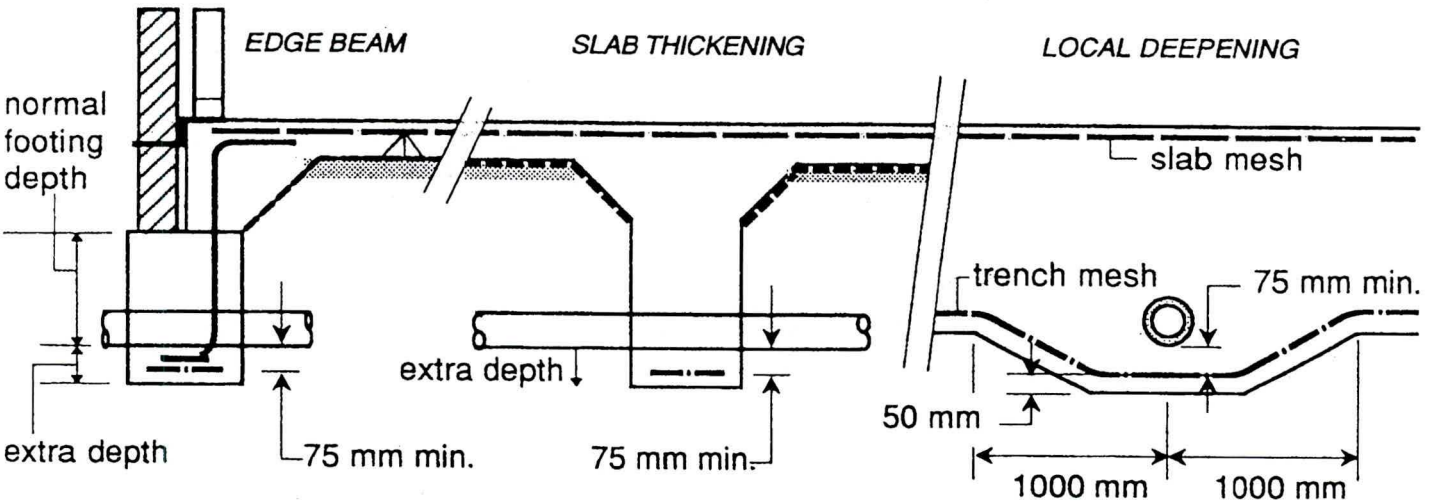

NOTE:- Specified footing and slab thickening depth and cover requirements must be maintained. Where service pipe interferes with cover to steel or concrete depths the footing must be locally deepened as shown.
Particular attention should be paid to the provision of flexible service connections as detailed in AS 3500 "The National Plumbing and Drainage Code - 1990" on all Class M,H and E class sites.

THE FOLLOWING PRACTICES ARE NOT PERMITTED.

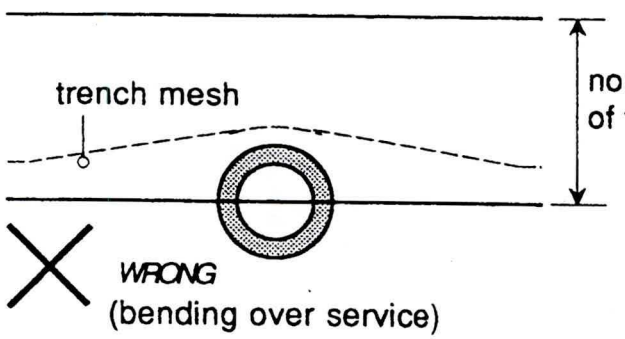

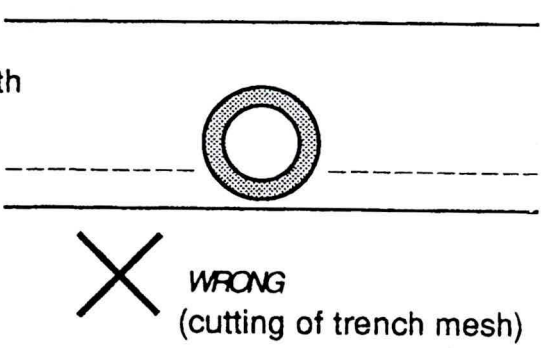

APPENDIX VA

CONSTRUCTION REQUIREMENTS FOR NON-STRUCTURAL SLABS WITH PIERS.

EITHER OR

ALTERNATIVE DETAIL FOR N.S.S & MAIN SLAB POURED SIMULTANEOUSLY.

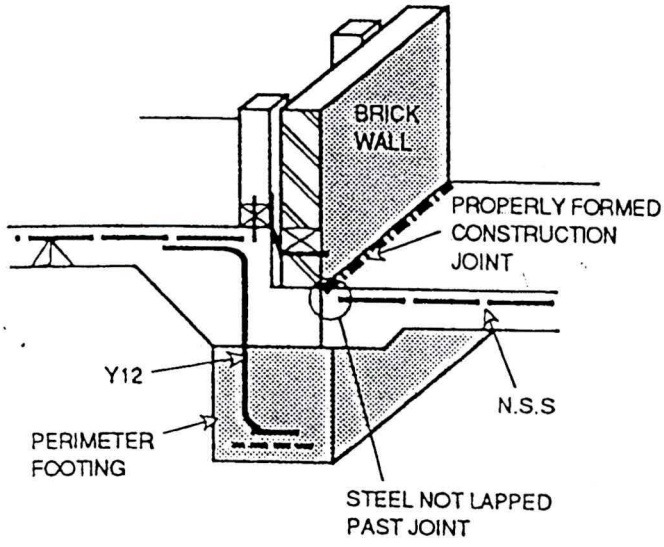

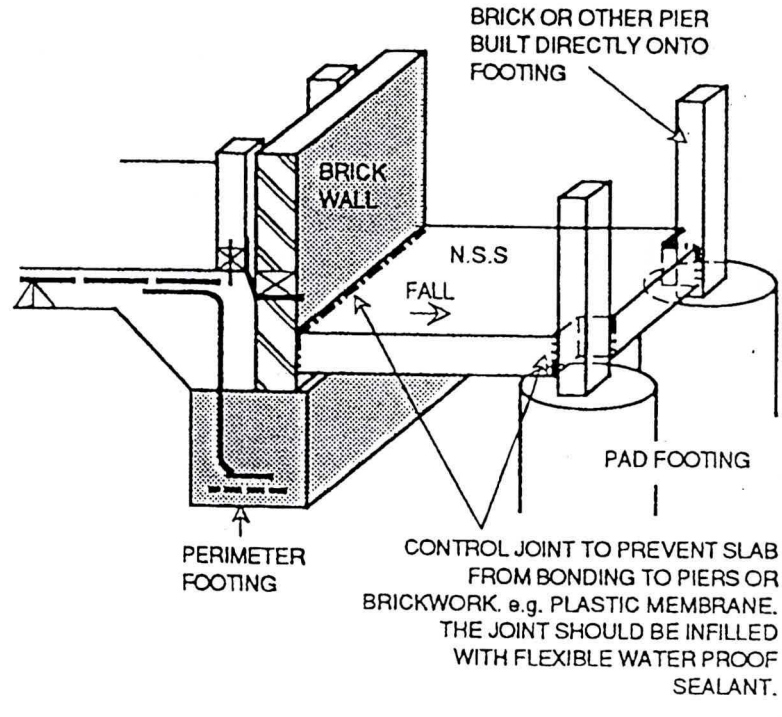

WHERE THE SLAB ON GROUND HAS NOT BEEN DESIGNED AS PART OF THE STRUCTURAL SLAB, IT IS CLASSIFIED AS A "NON-STRUCTURAL SLAB" (N.S.S).

NON-STRUCTURAL SLABS INCLUDE SOME OF THE FOLLOWING : DETACHED GARAGE SLABS, PATIO AND VERANDAH SLABS, GROUND LEVEL SLABS UNDER HIGHSET HOUSES (AREAS TO BE USED FOR CAR AND GENERAL STORAGE) AND OPEN CARPORTS.

NON-STRUCTURAL SLABS ARE NOT DESIGNED TO SUPPORT LOAD BEARING WALLS AND PIERS. THEREFORE IT IS ESSENTIAL THAT ALL STRUCTURAL BRICK PIERS OR COLUMNS OR WALLS BE PLACED DIRECTLY ONTO THE FOOTINGS AND NOT ON THE NON-STRUCTURAL SLAB. i.e. THESE SLABS SHOULD BE CONSTRUCTED AFTER PERIMETER WALLS AND PIERS HAVE BEEN BUILT OR AS PER THE ALTERNATIVE DETAIL ABOVE.

WE RECOMMEND USING THE SAME REINFORCEMENT AS THAT SPECIFIED FOR THE STRUCTURAL SLAB (OR F72 OR EQUIVALENT IF NOT SPECIFIED.) MINIMUM SLAB THICKNESS TO BE 100 mm.

TO HELP CONTROL CONCRETE SHRINKAGE, CONSTRUCTION JOINTS SHOULD BE PLACED IN THE SLAB AT A MAXIMUM 3 METRE CENTRES. IT IS IMPORTANT TO ENSURE THAT THE REINFORCEMENT REMAINS CONTINUOUS THROUGH THE JOINT OTHERWISE ONE PANEL MAY "HEAVE" UPWARDS RELATIVE TO THE OTHER.

NOTE: EXTRA SHRINKAGE CRACKING IS TO BE EXPECTED IN A NON-STUCTURAL SLAB. BRITTLE SURFACE TREATMENTS (SUCH AS CERAMIC TILES) ARE DEFINITELY NOT SUITABLE OVER NON-STRUCTURAL SLABS.

NON-STRUCTURAL SLABS WILL NOT PERFORM AS WELL AS STRUCTURAL DWELLING SLABS. IF SIMILAR PERFORMANCE IS REQUIRED, WE MUST BE CONTACTED SO THAT A REDESIGN CAN BE UNDERTAKEN. OWNERS MUST BE AWARE THAT INCREASED PERFORMANCE WILL INCREASE COSTS.

ACN 065 058 005

EAST COAST GEOTECHNICAL PTY. LTD.

FOUNDATION CONSULTANTS

3/246 EVANS ROAD, SALISBURY Q 4107
P.O. BOX 404, SALISBURY Q 4107

TELEPHONE: (07) 3875 1933
FAX: (07) 3277 7746

NO.2 HEPWORTH STREET,
LABRADOR Q 4215

TELEPHONE: (07) 5529 2329
FAX: (07) 5529 2182

SERVICES OFFERED BY EAST COAST GEOTECHNICAL PTY. LTD.

SITE CONTOURS

SITE INVESTIGATIONS

FOOTING DESIGN

CUT & FILL DESIGN

WIND RATINGS

BRACING, FRAMING & TIE-DOWN

RETAINING WALLS/FENCES

SITE VISITS

INSPECTIONS & CERTIFICATION

PERCOLATION TESTING

DENSITY TESTING

CBR TESTS

CONTAMINATION TESTING

SLOPE STABILITY

SITE MANAGEMENT ON SMALL DEVELOPMENTS

SUBDIVISIONAL AREA INVESTIGATION & CERTIFICATION OF EARTHWORKS

STRUCTURAL DESIGN

INVESTIGATION OF STRUCTURAL FAILURES

TIMBER MINI-PILING

BORE HOLE DRILLING

STEEL SCREW PILING

Document No: .....GA.0013 Issue: .....2.....Date: 19/2/97

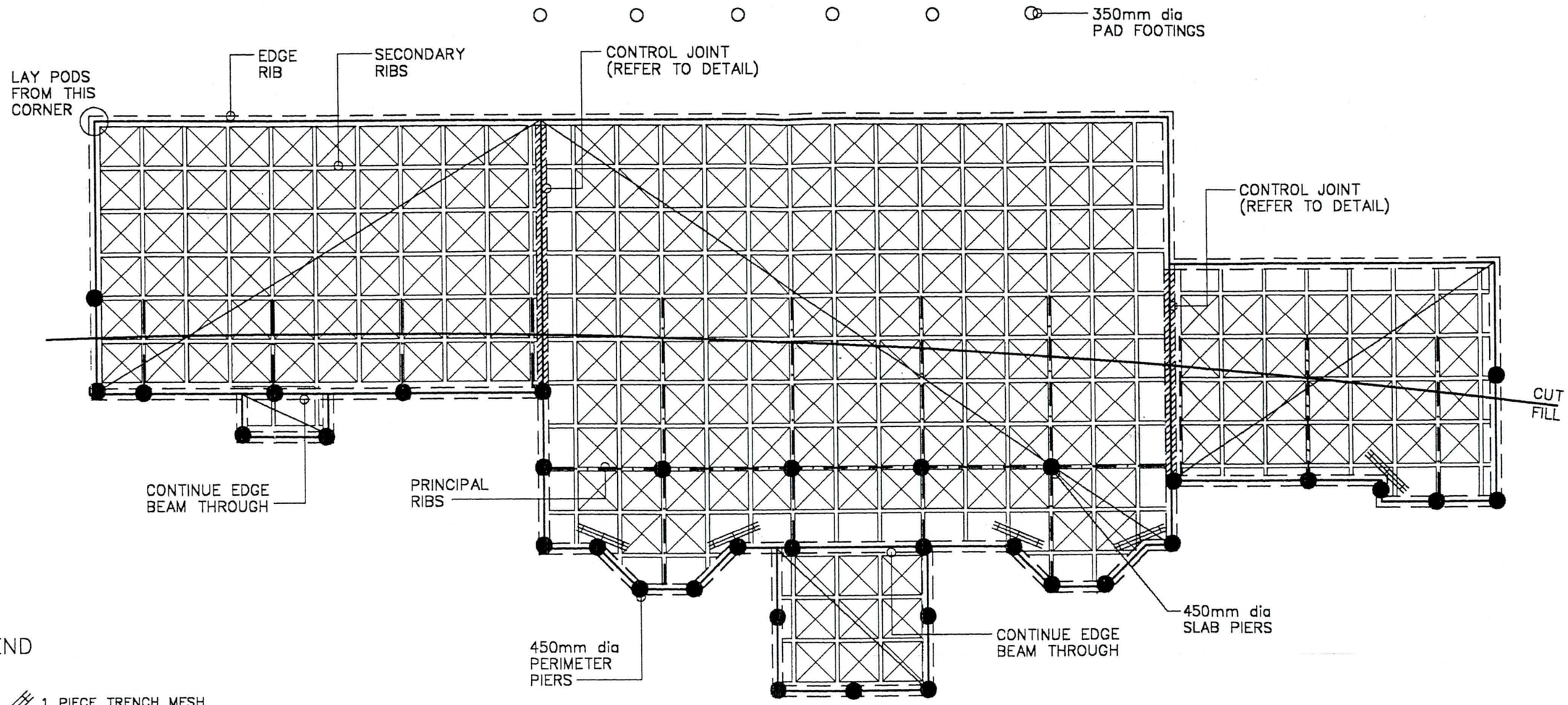

LEGEND

1 PIECE TRENCH MESH
1500 LONG TIED ACROSS
RE-ENTRANT CORNERS

1 PIECE SLAB MESH
2000x1200 TIED ACROSS
RE-ENTRANT CORNERS

STANDARD POD
1090x1090

PARTIAL POD

85 R.C. SLAB WITH
F82 (OR EQUIVALENT)
25mm TOP COVER

R#	DATE	REVISIONS	REC.	APPR.

EAST COAST GROUP OF COMPANIES

EAST COAST GEOTECHNICAL P/L

POSTAL ADDRESS : P.O. BOX 404, SALISBURY, QLD. 4107
PHONE : (07) 3875 1933 *FAX :* (07) 3277 7746
WEB: www.eastcoast-geotech.com.au

DESIGNED: J.L.
DRAWN: T.L.

FOOTING AND SLAB PLAN

SITE ADDRESS : 187 BENHAM ROAD CALAMVALE

REF # : 9A1607
DATE : 15/10/99
SCALE : 1:125 approx

R

DECISION NOTICE *Integrated Planning Act 1997 s 3.5.15*

THIS FORM MUST BE USED BY ASSESSMENT MANAGERS AND PRIVATE CERTIFIERS WHEN GIVING NOTICE ON A DEVELOPMENT APPLICATION

2

AUSTRALIAN BUILDING CODES CERTIFICATION

COUNCIL COPY

Cenplex Constructions
PO Box 491
Sunnybank Hills 4109

Dear Sir/Madam,

DEVELOPMENT APPLICATION FOR :-

DEVELOPMENT PERMIT NUMBER :-**99/10197 (QUOTE NUMBER WHEN BOOKING INSPECTION)**

LOCAL GOVERNMENT AREA: Brisbane City Council

The above development application was assessed and: **Approved 27 October, 1999**

The following schedule provides all the relevant details.

1 Referral agencies

Concurrence agencies Nil
Name and address

Advice Agencies Nil
Name and address

2 Conditions (if applicable)

Compliance with the Building Act 1975 and conditions attached.

3 Reasons for refusal *(if applicable)*

Section 3.5.15(2) (e) of IPA 1997

4 Approval Type

Development Permit for the Carrying out of Building Work

5 Further Development Permits Required *(if applicable)*

NIL

6 Rights of Appeal

"Under the Integrated Planning Act 1997, the applicant and the referral agency have a right of appeal against this decision to the Planning and Environment Court (section 4.1.27), or a Building and Development Tribunal, (sections 4.2.9, 4.2.10). A copy of the relevant provisions is attached."

7 Private Certifier

Name/Accreditation No: David Biles A74336

Signature: _____ Date: 27 October, 1999

BUILDING AND PLANNING CONSULTANTS
THE HOME & DISPLAY CENTRE
Cnr Old Chatswood Rd & Pacific H' way
Springwood Qld 4127
Phone: (07) 38087900 Fax: (07) 38084450

David Biles Marty Koskinen Greg Rust

CONDITIONS OF DEVELOPMENT PERMIT FOR CLASS 10 BUILDINGS (SWIMMING POOLS & SPA POOLS)

The following stages of inspection are mandatory for this development::-

Substantial completion of building work (final)

Inspections to be carried out by ABCC require 24 hours notice.

1. Before the pool is filled with water to a depth of 300mm or more, fencing in accordance with the Building Act 1975 and Regulations MUST be constructed. A building incorporated as a pool fence as part of the safety barrier must meet the requirements of the standard i.e. openings must be protected, non climbable Note Doors opening from a house or the like are NOT permitted to open to the pool enclosure

2. The construction of swimming pool fences MUST comply with the Building Act 1975 and Regulations and Australian Standard AS1926

3. The backwash discharge from the swimming pool filtration system is to be connected to the Local authority requirements Note Discharge connection points may include stormwater system, street kerb and channel or sewer system of which the particular Council should verify.

4. Pool filtration equipment must be located and if necessary enclosed such that the location will not be a nuisance to adjoining premises

5. IF Steel reinforcement is provided an electrical conductor in accordance with BCAQld 3.2.2 must be installed to reduce the risk of electrical shock to pool users

6. The builder shall provide copy of these conditions to the building owner including advice that it is the owners responsibility to maintain the pool safety fence at all times

7. Building work shall be keep clear of Council sewer, not extend over or adjacent to sewer manhole, sewer and sewer connection points. Building work within the zone of influence of Councils sewer line shall be piered below the invert level of the sewer line. Excavation in close proximity to sewer should be undertaken by hand.

8. The exact location of utility services, septic trenches or other s disposal services are to be determined on site. The pool maintained at 6 metres clearance from septic trenches and the like.

9. Sewer plans and notations are indicative only and the exact sewer location and depth MUST be determined on site

10. Combined height of any retaining wall and fence shall not exceed 2 metres within 1.5m of a side/rear boundary, above natural ground level without a relaxation given by Council. Retaining walls in excess of one metre in height require approval from the certifier together with engineers details

11. The approval shall comply with any relevant requirements of Councils planning scheme, policies, relaxation and plans of development for the site

12. The following certificates prepared by a competent person shall be supplied at final inspection of the building work. , Engineered inspections, pool reinforcement

BUILDING AND PLANNING CONSULTANTS
THE HOME AND BUILDING DISPLAY CENTRE
Cnr Old Chatswood Rd & Pacific Highway
Springwood Qld 4127
Phone: (07) 3808 7900 Fax: (07) 3808 4450

David Biles **Marty Koskinen** **Greg Rust**

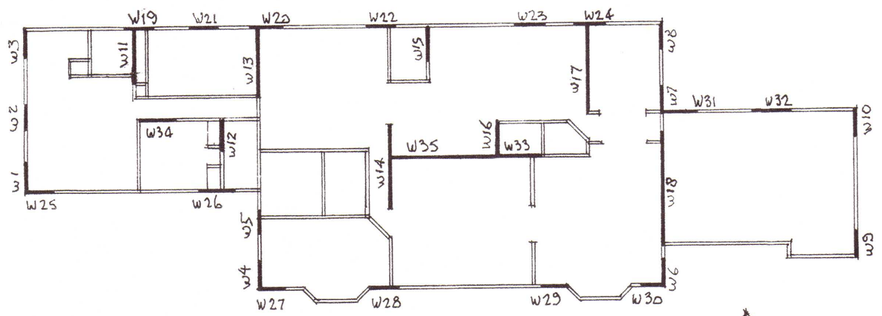

WIND FORCE A.

WIND FORCE B.

GROUND FLOOR WALL BRACING

WIND FORCE A			WIND FORCE		
W1	1·2 TB 4B	4·8	W19	1·2 TB 4B	4·8
W2	"	4·8	W20	"	4·8
W3	"	4·8	W21	"	4·8
W4	"	4·8	W22	"	4·8
W5	"	4·8	W23	"	4·8
W6	"	4·8	W24	"	4·8
W7	"	4·8	W25	"	4·8
W8	"	4·8	W26	"	4·8
W9	"	4·8	W27	"	4·8
W10	"	4·8	W28	"	4·8
W11	2·4 TB 4B	9·6	W29	"	4·8
W12	1·2 TB 3A	2·4	W30	"	4·8
W13	3·0 TB 4B	12·0	W31	"	4·8
W14	3·6 TB 4B	14·4	W32	"	4·8
W15	1·5 TB 3A	3·0	W33	1·8 TB 3A	3·6
W16	1·5 TB 3A	3·0	W34	2·4 TB 1	2·4
W17	4·0 TB 4B	16·0	W35	5·0 TB 4B	20·0
W18	5·0 TB 4B	20·0			
REQUIRED		122·05 kN	REQUIRED		70·4 kN
ACHIEVED		128·40 kN	ACHIEVED.		93·2 kN.

COUNCIL COPY

Aust. Building Codes Certification
APPROVED
Building Certifier:
BSA No:
A24736

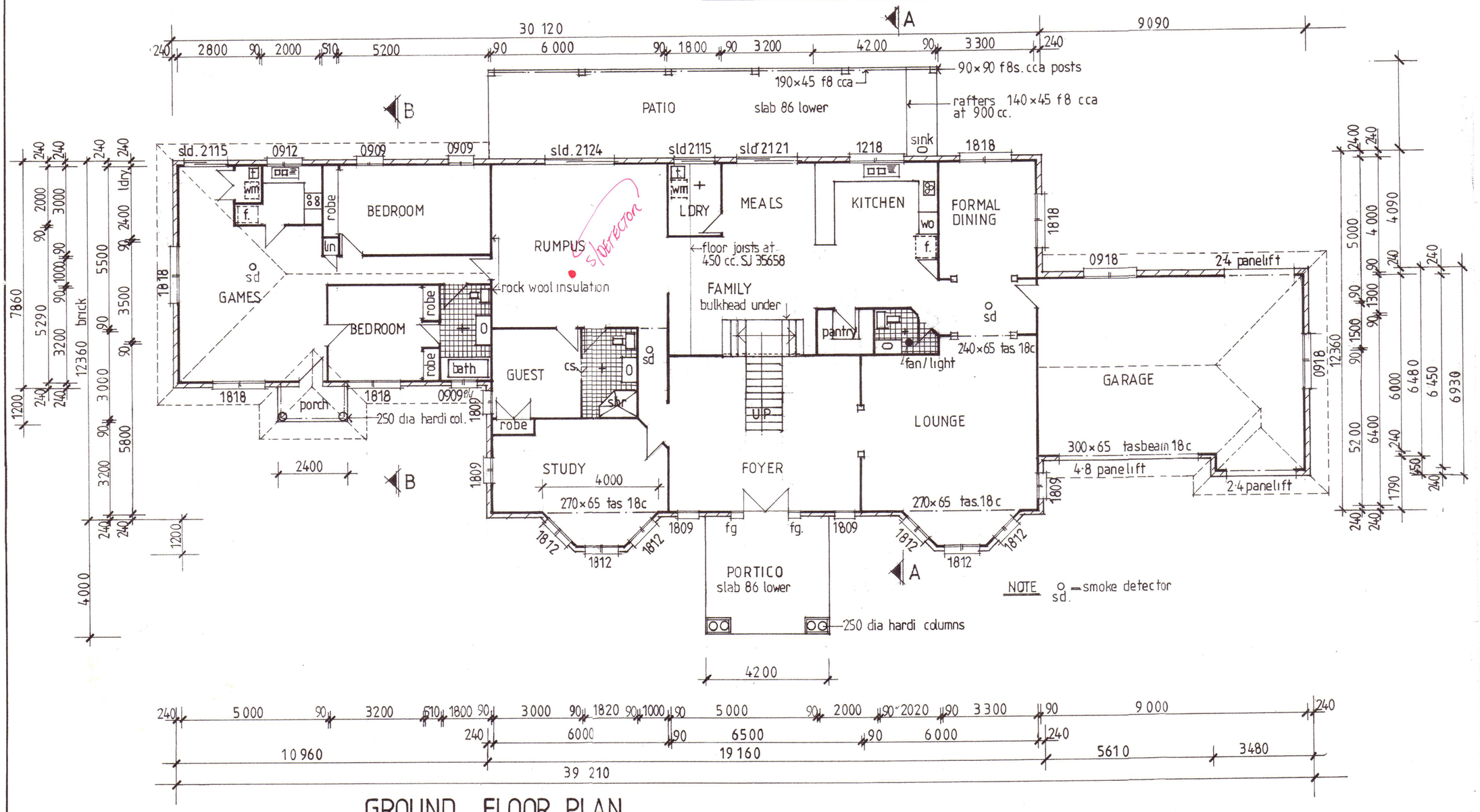

GENERAL NOTES.

1) Written dimensions to be taken in preference to scaling. (Do not scale)
2) Internal Linings.
   Ceilings 13mm. Gyprock
   Walls 10mm. Gyprock.
   Wet areas 6mm. Villaboard.
3) WC. doors to be fitted with lift off hinges.
4) Laminated beams tasbeam 18c
5) Roof trusses & beams to be designed by truss man'fts.
6) Wall Framing f8, seasoned.

	studs at 450 c/c and Nogging not notched	studs at 450 c/c and Nogging notched
Top pl.	90×35	90×35
Bott. pl.	2/90×35	90×35
Opening	lintel f8s.	studs at openings.
900	120×45	1/90×35
1200	140×45	2/ "
1500	190×45	2/ "
1800	190×70	2/ "
2100	240×70	2/ "
2400	240×70	2/ "

7) Wet areas to comply with Pt.7 of the B.C.A.
8) Termite protection to be in accordance with A.S.3660.1/95. Treatment to be Dursban.

PROPOSED RESIDENCE.

CLIENT Z. AZIZ

SITE ADDRESS Lot No 187
BENHIAM STREET
CALAMVALE

LED. Lot No 187 on RP. 92598
Parish ~~KESSELMAN~~ area 1·022 ha.

Designed in accordance with the Building Act 1975-1992 and the BCA.
WIND FORCE 33 mps.

DATE 23·8·99
SCALE 1:100 1:200
SHEET NO 1 of 5

AREA.
Living 385 m²
Portico 16·8 m²
Patios 49·08 m²

BOB BALDWIN
DESIGN DRAFTSMAN
QBSA lic no. 65592
1043 Rochedale Rd, ROCHEDALE
Ph. 3341-7076.

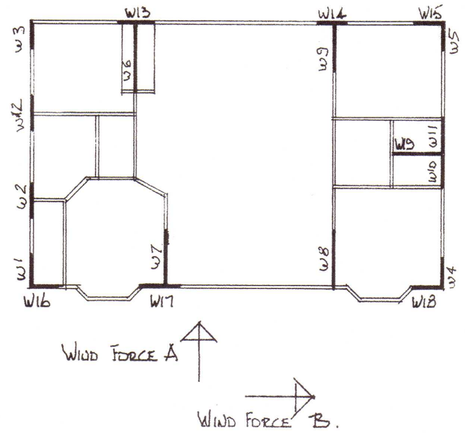

WIND FORCE A			WIND FORCE B		
W1	1·2TB4B	4·8	W13	0·9TB 4B	3·6
W2	"	4·8	W14	"	3·6
W3	"	4·8	W15	"	3·6
W4	"	4·8	W16	"	3·6
W5	"	4·8	W17	"	3·6
W6	3·0TB3A	6·0	W18	"	3·6
W7	2·4TB1	2·4	W19	2·44TB3A	4·88
W8	2·4TB1	2·4			
W9	2·4TB1	2·4			
W10	1·465TB3A	2·93			
W11	1·465TB3A	2·93			
W12	1·2TB 4B	4·8			
REQUIRED	43·7 kN		REQUIRED	20·70 kN	
ACHIEVED	47·86 kN		ACHIEVED	26·48 kN.	

COUNCIL COPY

Aust. Building Codes Certification
APPROVED
Building Certifier:
BSA No: A74336

UPPER FLOOR WALL BRACING.

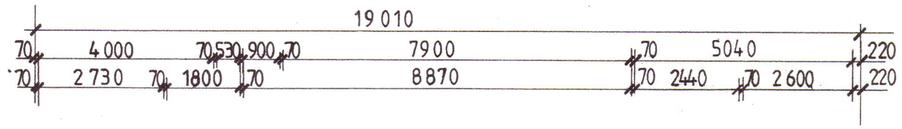

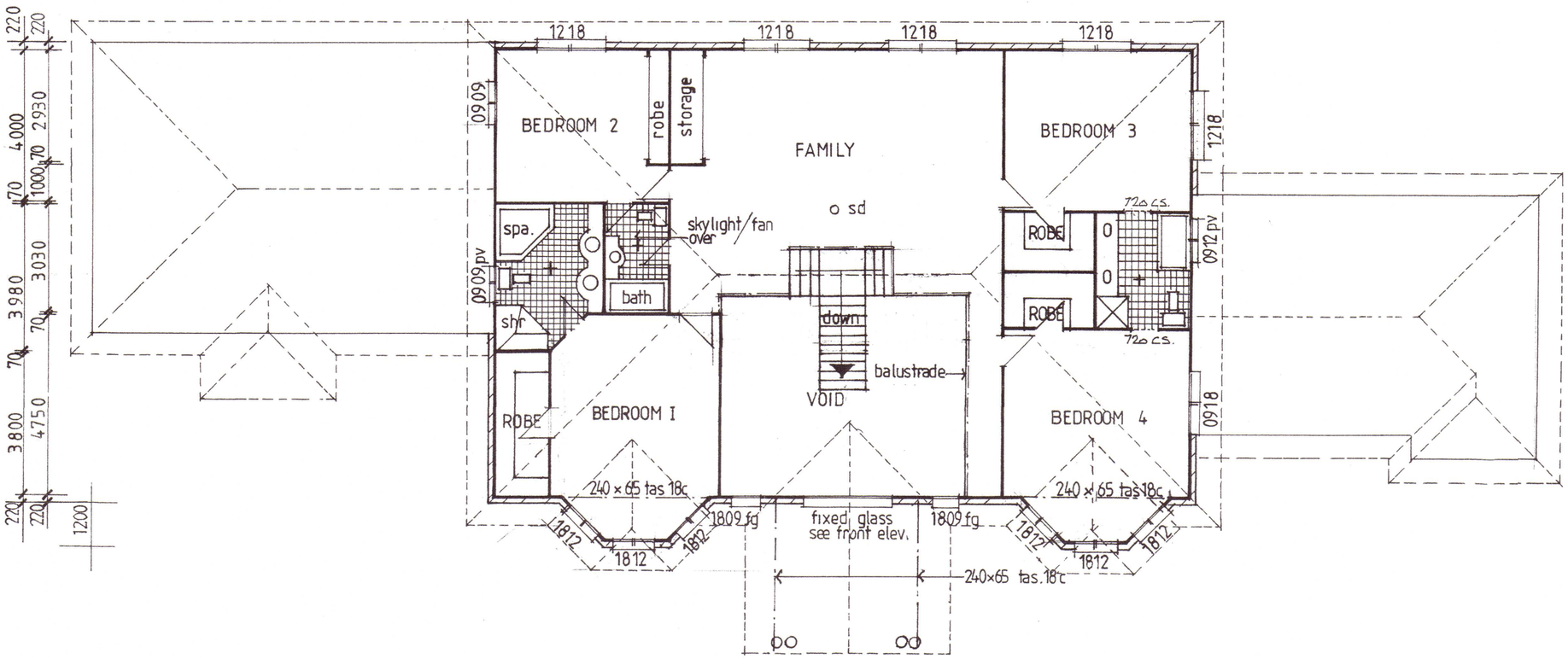

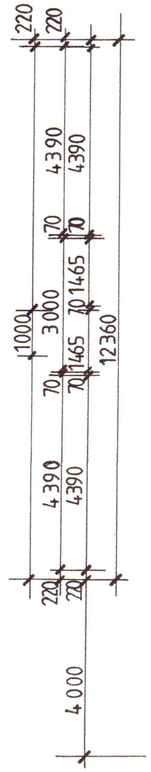

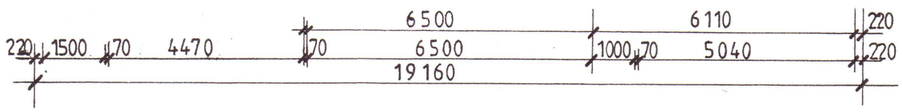

UPPER FLOOR PLAN.

GENERAL NOTES

1) Written dimensions to be taken in preference to scaling.(Do not scale)
2) Internal Linings.
Ceilings 13mm. Gyprock
Walls 10mm. Gyprock.
Wet areas 6mm. Villaboard.
3) WC. doors to be fitted with lift off hinges.
4) Laminated beams
5) Roof trusses & beams to be designed by truss man'fts.
6) Wall Framing f8.seasoned.

studs at 450 c/c 800 Nogging	external not notched	internal
	70 × 35	70×35
Top pl	2/ 70×35	70 ×35
Bott. pl	70×35	70×35
Opening	lintel f8 s	studs at openings
900	90×35	1/ 70×35
1200	140×35	2/ "
1500	190×35	2/ "
1800	190×45	2/ "
2100	190×70	2/ "
2400	240×70	3/ "

7) Wet areas to comply with F1.7 of the B.C.A.
8) Termite protection to be in accordance with A.S.3660.1/95 Treatment to be Dursban.

PROPOSED RESIDENCE.

CLIENT Z. AZIZ

SITE ADDRESS Lot No 187
BENHIAM STREET
CALAMVALE
QLD.

RPD. Lot No 187 on RP 92598
parish KEERONGBILLY area 1·022 ha

Designed in accordance with the Building Act 1975-1992 and the BCA.
WIND FORCE 33 mps

DATE 23·8·99
SCALE 1:100 1:200
SHEET NO 2 of 5

AREA.
237 m²
upper flr.

BOB BALDWIN
DESIGN DRAFTSMAN
OBSA lic no. 65592
1043 Rochedale Rd, ROCHEDALE
Ph. 3341-7076.

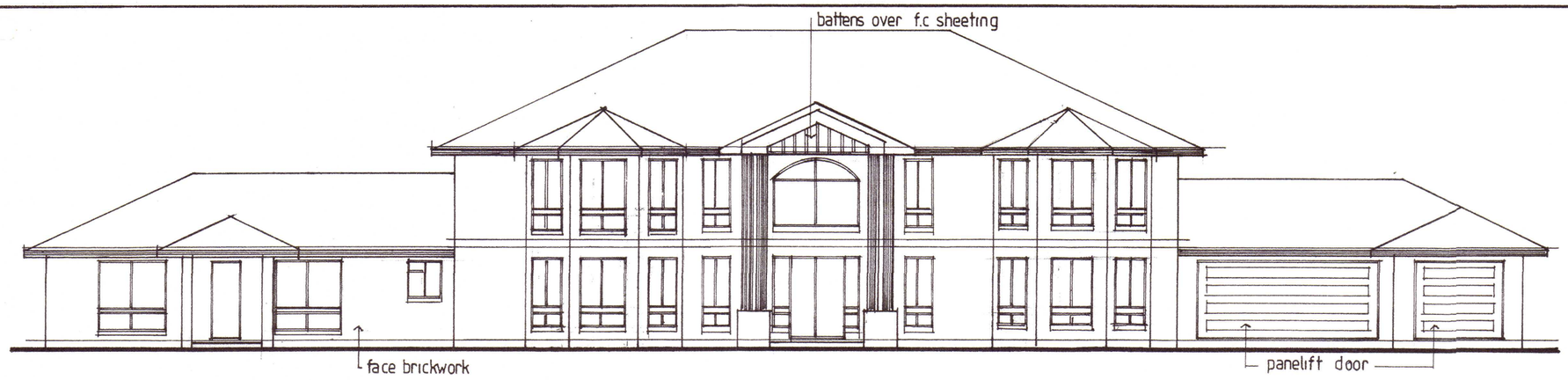

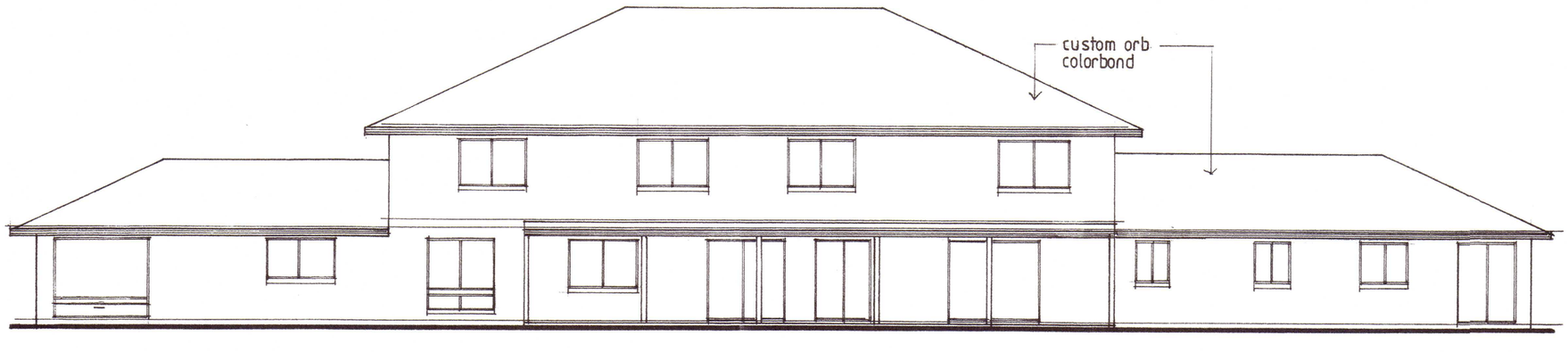

REAR ELEVATION.

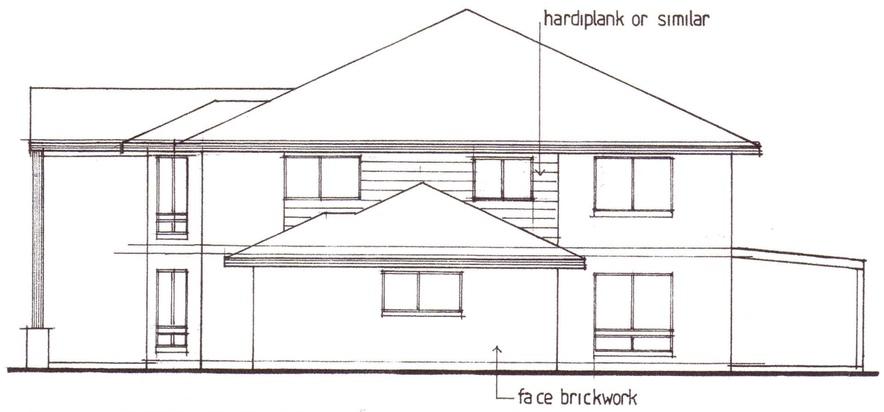

R.H. SIDE ELEVATION

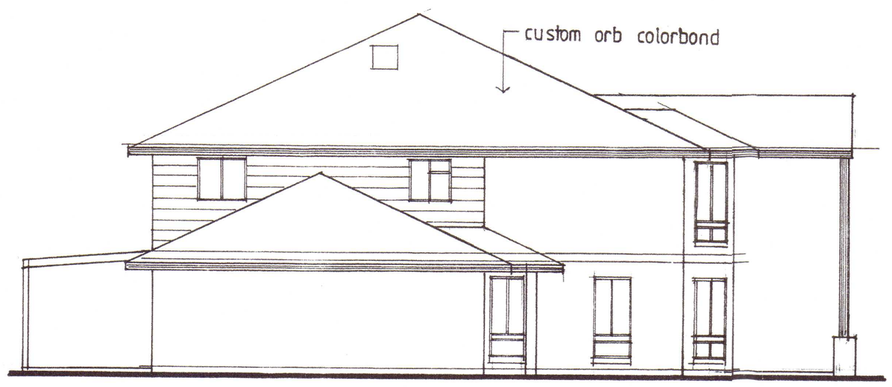

L.H. SIDE ELEVATION.

COUNCIL COPY

Aust. Building Codes Certification
APPROVED
Building Certifier:
BSA No: A74336

PROPOSED RESIDENCE
CLIENT Z. AZIZ
SITE ADDRESS Lot No 187
BENHIAM STREET
CALAMVALE
LOT Lot No 187 on RP 92598
Parish Yeerongpilly area 1022 ha
Designed in accordance with the Building Act 1975-1992 and the Regs
WIND FORCE 33 mps.
DATE 23·8·99
SCALE 1:100, 1:200
SHEET NO 3 of 5

BOB BALDWIN
DESIGN DRAFTSMAN
QBSA lic no. 65592
1043 Rochedale Rd, ROCHEDALE
Ph. 3341-7076.

COUNCIL COPY
Aust. Building Codes Certification
APPROVED
Building Certifier:
BSA No: 47433

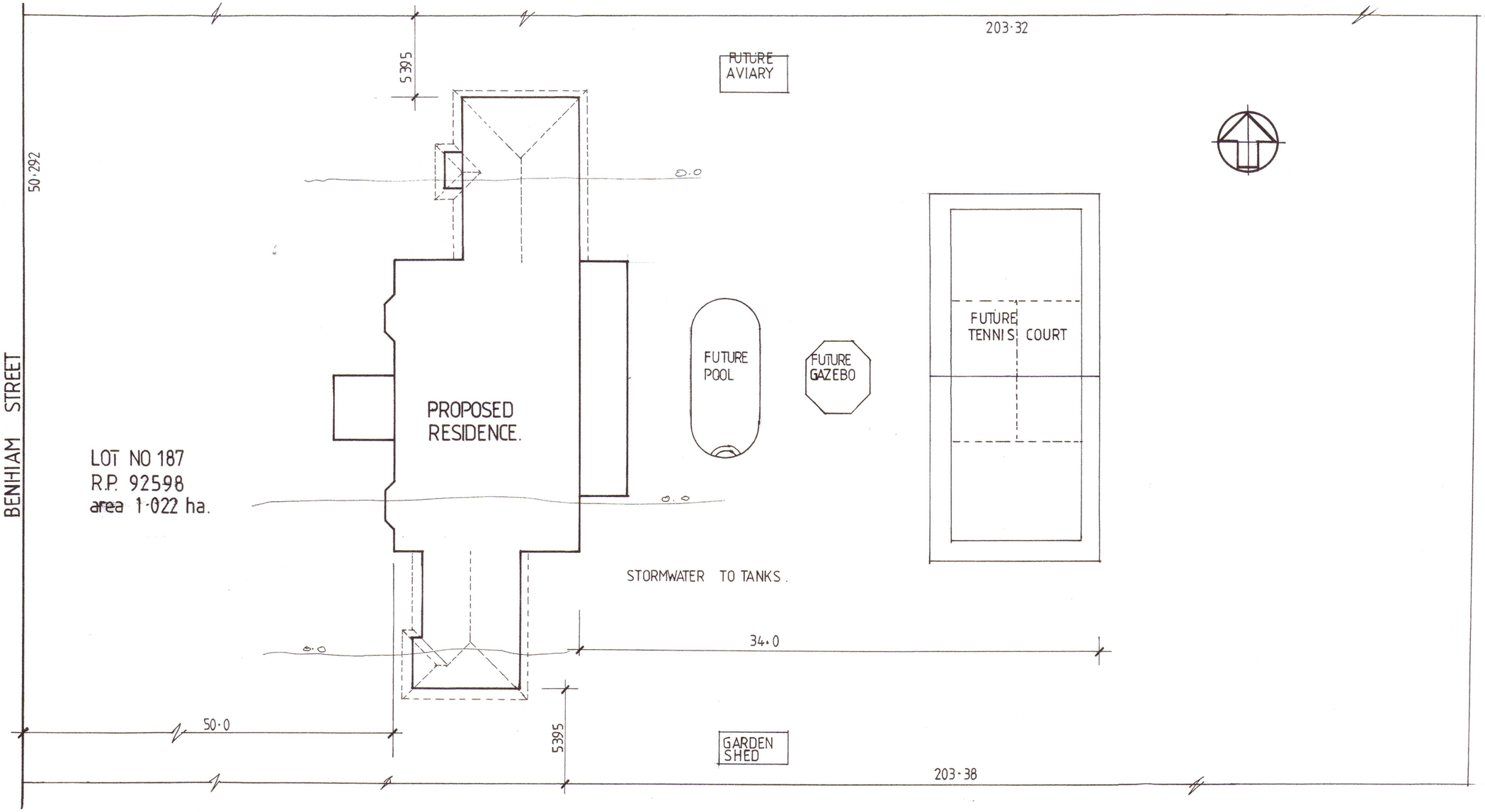

SITE PLAN 1·200

PROPOSED RESIDENCE.
CLIENT: Z. AZIZ
SITE ADDRESS: Lot No 187 BENHIAM STREET CALAMVALE
L.G.: CITY OF LOGAN
R.P.D.: Lot No 187 on R.P. 92598
Parish: YEERONGPILLY area 1·022 ha.
Designed in accordance with the Building Act 1975-1992 and the BCA.
WIND FORCE 33 mps.
DATE 23·8·99
SCALE 1:100 1:200
SHEET NO 4 of 5

BOB BALDWIN
DESIGN DRAFTSMAN
QBSA lic no. 65592
1043 Rochedale Rd, ROCHEDALE
Ph. 3341-7076.

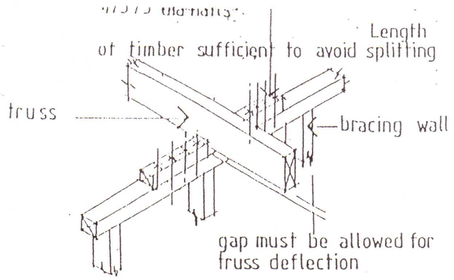

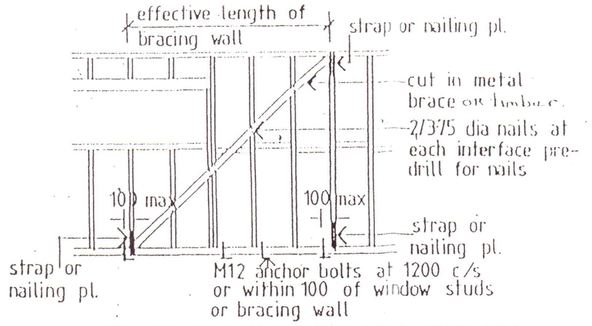

TIMBER FRAMED BRACING WALL TYPE TB1

BRACING WALL TO TRUSSES 'B'

design strength 3.0 kN · JD4

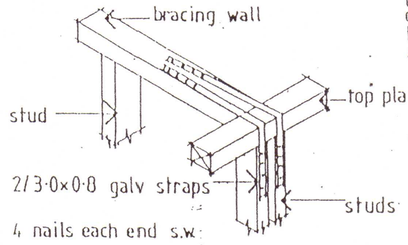

BRACING WALL TO EXTERNAL WALL 'A'

design strength 4.4 kn - JD4

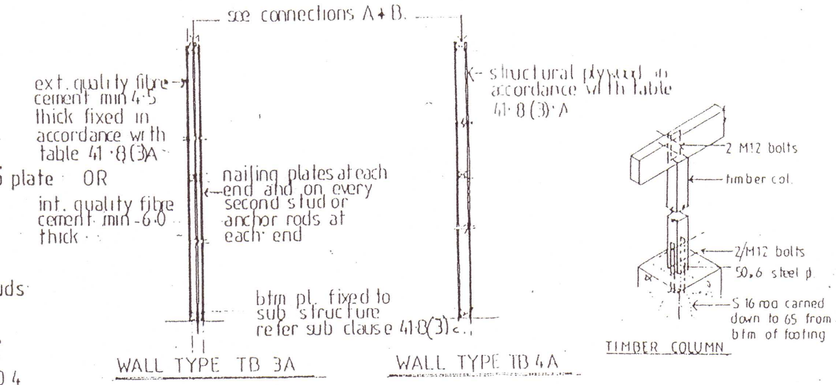

WALL TYPE TB 3A

WALL TYPE TB 4A

TIMBER COLUMN

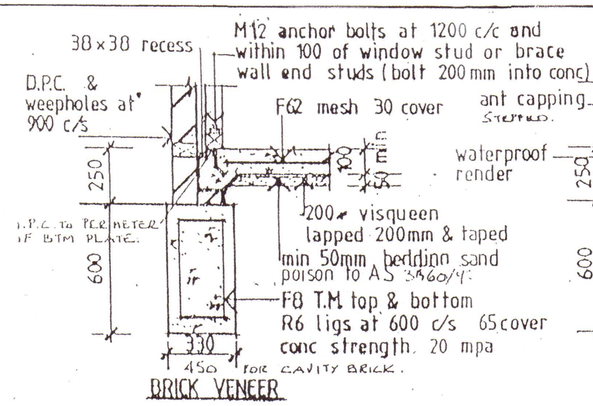

BRICK VENEER

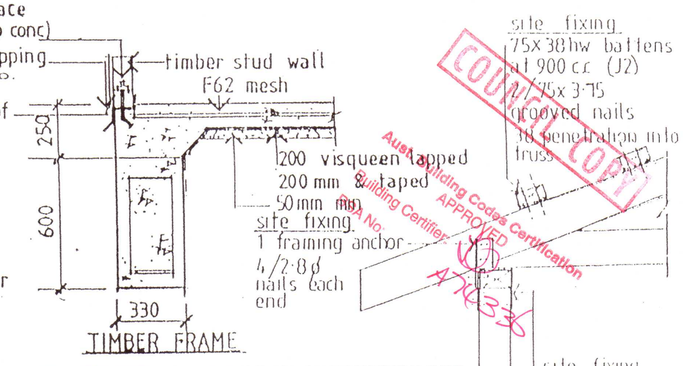

TIMBER FRAME

site fixing
75x38 hw battens
at 900 c.c. (J2)
75x3.75
grooved nails
38 penetration into
truss
site fixing
30x0.8 G.I. strap
3/2.8ø nails
each end
M12 anchor
bolts at 1200cc
(SEE NOTE)
TRUSSES
AS SHOWN
ON PLANS
STRAP TO
EACH TRUSS
STRAP TO
EACH TRUSS
STRAP TO
EACH TRUS