REV # 7

BCC DS
RECEIVED
02/11/2026
APPLICATION REF
A006908306

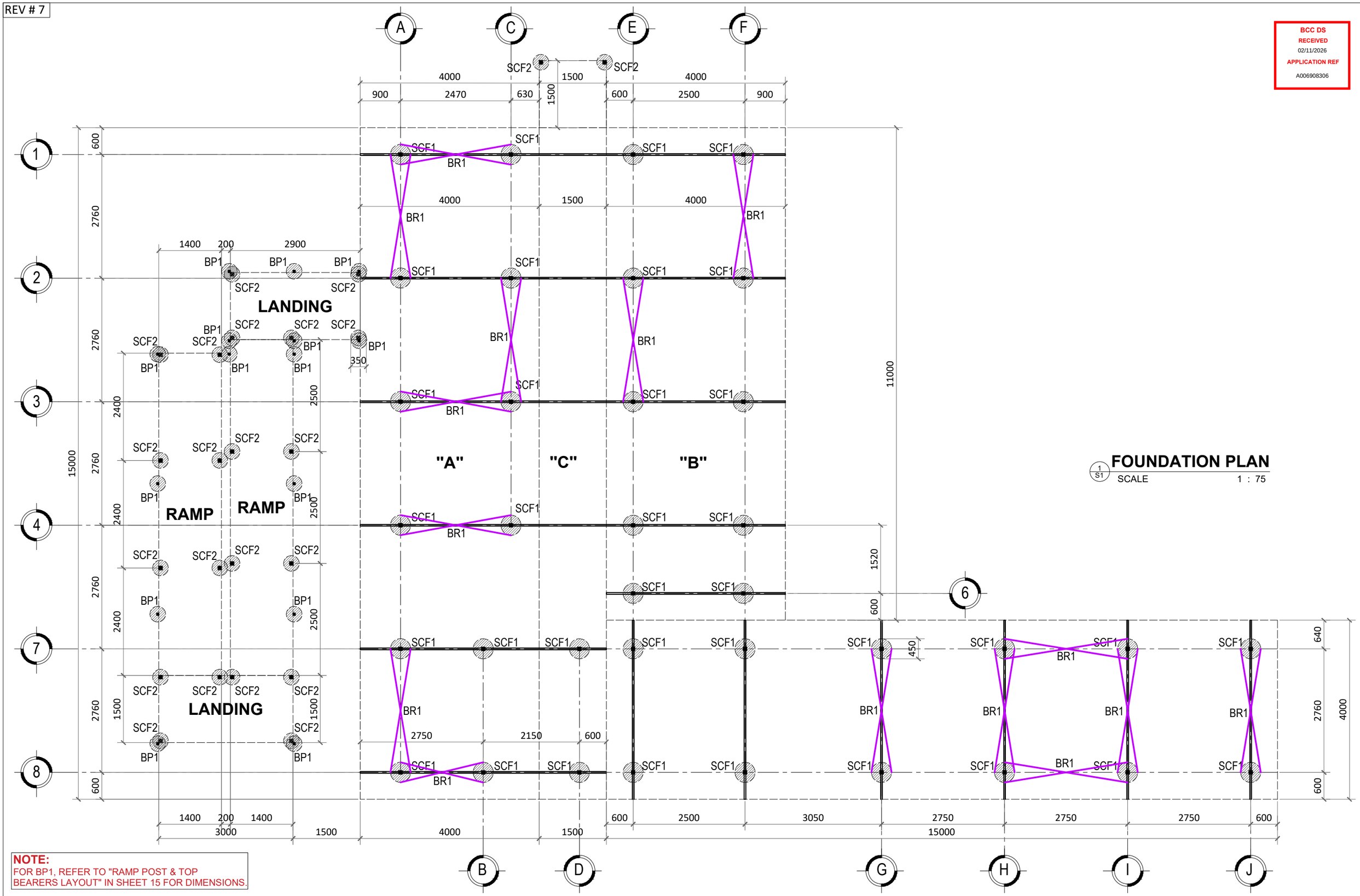

NOTE:
FOR BP1, REFER TO "RAMP POST & TOP BEARERS LAYOUT" IN SHEET 15 FOR DIMENSIONS.

FOUNDATION PLAN

1 / S1

SCALE 1 : 75

AFFORDABLE MODULAR BUILDINGS
PORTABLE BUILDING GROUP PTY LTD ABN: 54 655 549 241
TRANSPORTABLE BUILDINGS
RESIDENTIAL & COMMERCIAL
OFFICES / ABLUTION BLOCKS / WORKERS ACCOMMODATION / LUNCH ROOMS / TINY HOMES / GRANNY FLATS / SHIPPING CONTAINER MODIFICATIONS / HOME OFFICES

PROJECT : PORTABLE BUILDINGS JOINED - 2 x 4.0m WIDE x 15.0m LONG & 4.0m WIDE x 11.0m w/ DECK & PATIO
CLIENT: Inv 1027 - VIVIENNE WILLIAMS
PROJECT LOCATION: 487 ELLISON ROAD, ASPLEY, QLD 4034

REV # 7

BCC DS
RECEIVED
02/11/2026
APPLICATION REF
A006908306

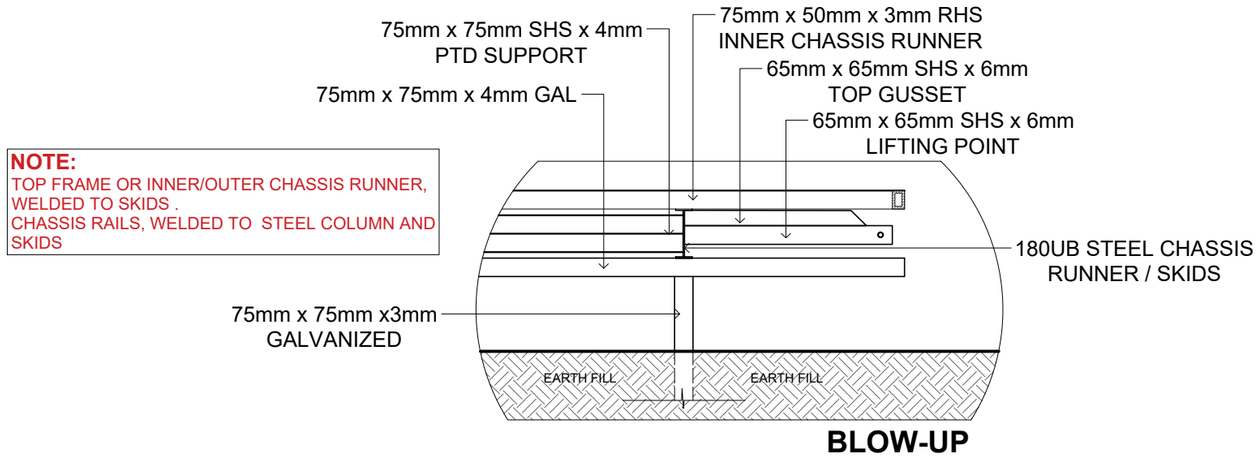

NOTE:
TOP FRAME OR INNER/OUTER CHASSIS RUNNER, WELDED TO SKIDS .
CHASSIS RAILS, WELDED TO STEEL COLUMN AND SKIDS

BLOW-UP

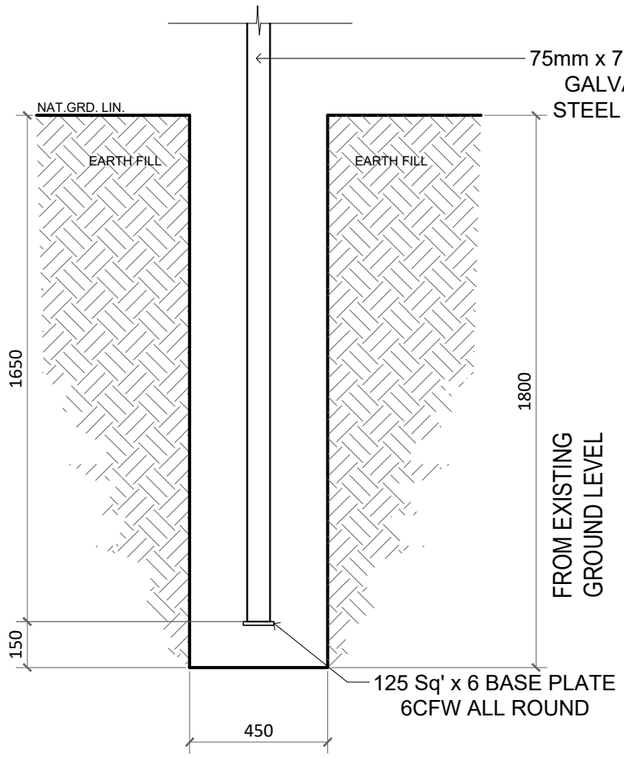

NOTE:
ALWAYS REFER TO SOIL TEST AND ENGINEER PLAN FOR THESE DRAWINGS ARE ONLY GUIDELINES .

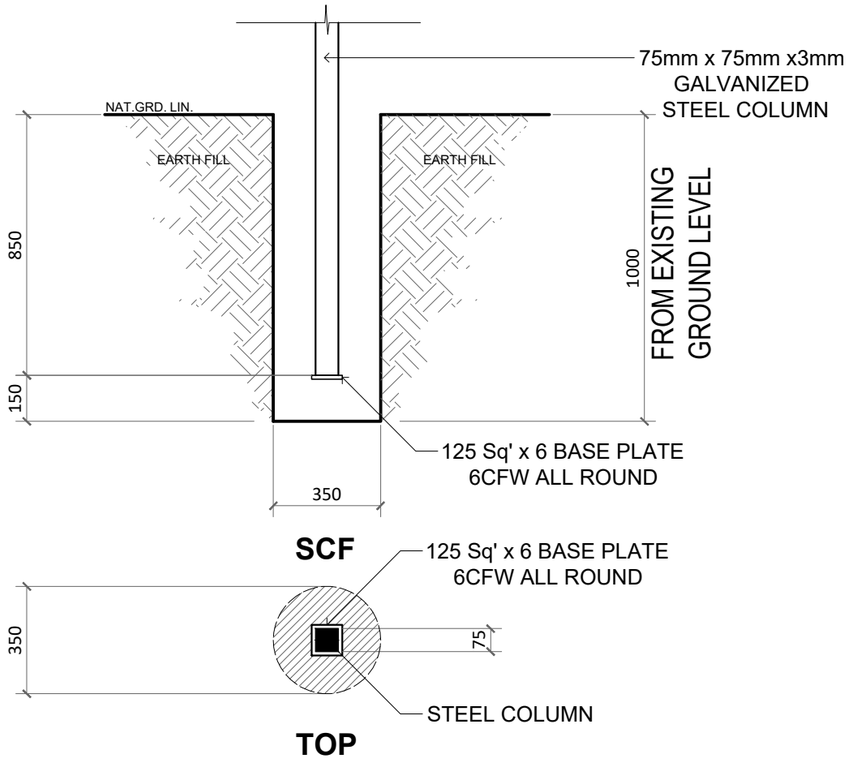

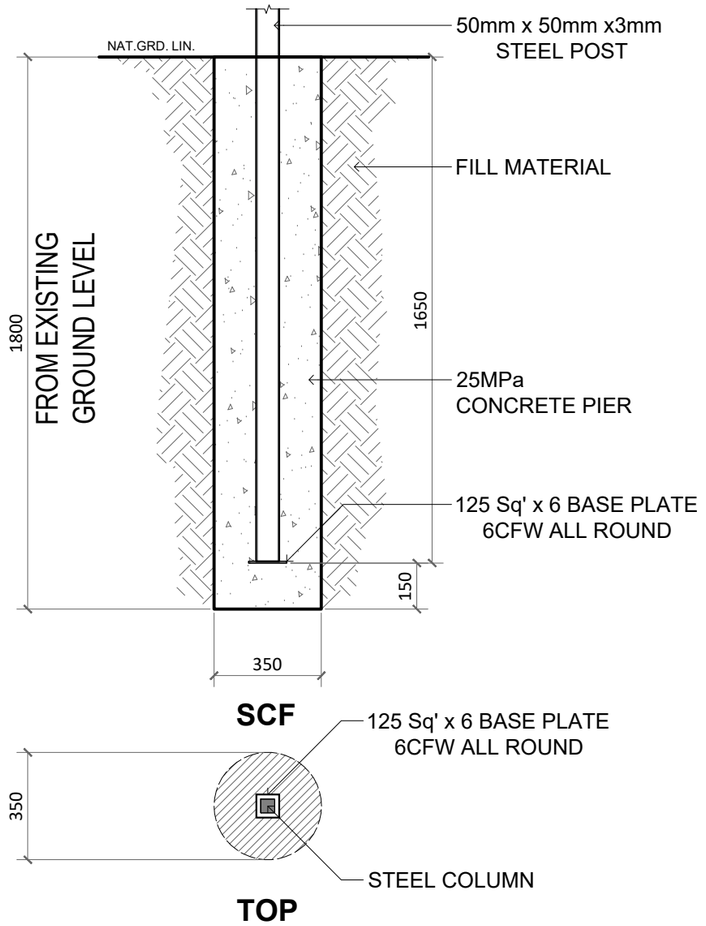

1 S2 **STEEL COLUMN FOOTING DETAIL "1"**
SCALE 1 : 20

2 S2 **STEEL COLUMN FOOTING DETAIL "2"**
SCALE 1 : 20

3 S2 **BORED PIER DETAIL**
SCALE 1 : 20

AFFORDABLE MODULAR BUILDINGS
PORTABLE BUILDING GROUP PTY LTD ABN: 54 655 549 241
TRANSPORTABLE BUILDINGS
RESIDENTIAL & COMMERCIAL
OFFICES / ABLUTION BLOCKS / WORKERS ACCOMMODATION / LUNCH ROOMS / TINY HOMES / GRANNY FLATS / SHIPPING CONTAINER MODIFICATIONS / HOME OFFICES

PROJECT : PORTABLE BUILDINGS JOINED - 2 x 4.0m WIDE x 15.0m LONG & 4.0m WIDE x 11.0m w/ DECK & PATIO
CLIENT: Inv 1027 - VIVIENNE WILLIAMS
PROJECT LOCATION: 487 ELLISON ROAD, ASPLEY, QLD 4034

REV # 7

BCC DS
RECEIVED
02/11/2026
APPLICATION REF
A006908306

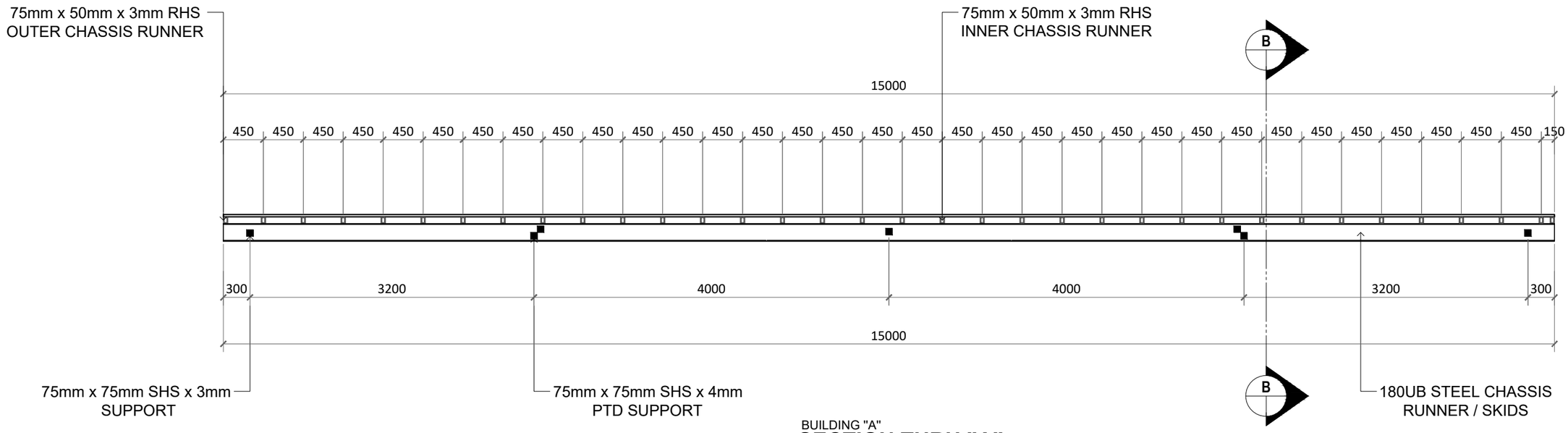

BUILDING "A"

SECTION THRU "A"

1/S3

SCALE 1 : 50

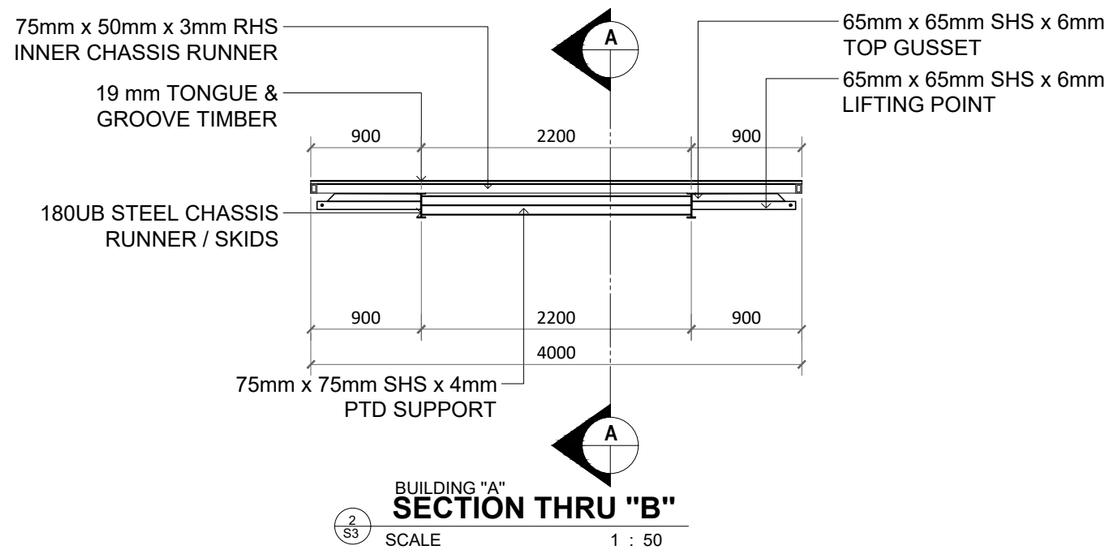

BUILDING "A"

SECTION THRU "B"

2/S3

SCALE 1 : 50

AFFORDABLE MODULAR BUILDINGS
PORTABLE BUILDING GROUP PTY LTD ABN: 54 655 549 241
TRANSPORTABLE BUILDINGS
RESIDENTIAL & COMMERCIAL
OFFICES / ABLUTION BLOCKS / WORKERS ACCOMMODATION / LUNCH ROOMS / TINY HOMES / GRANNY FLATS / SHIPPING CONTAINER MODIFICATIONS / HOME OFFICES

PROJECT : PORTABLE BUILDINGS JOINED - 2 x 4.0m WIDE x 15.0m LONG & 4.0m WIDE x 11.0m w/ DECK & PATIO
CLIENT: Inv 1027 - VIVIENNE WILLIAMS
PROJECT LOCATION: 487 ELLISON ROAD, ASPLEY, QLD 4034

REV # 7

BCC DS
RECEIVED
02/11/2026
APPLICATION REF
A006908306

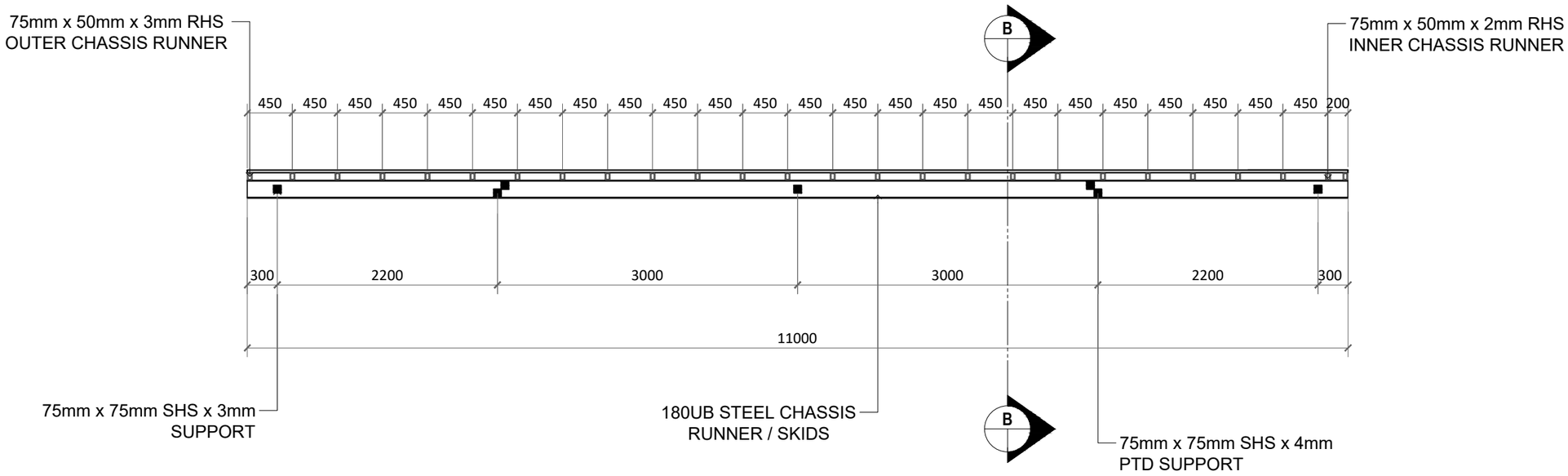

BUILDING "B"

SECTION THRU "A"

1 / S4

SCALE 1 : 50

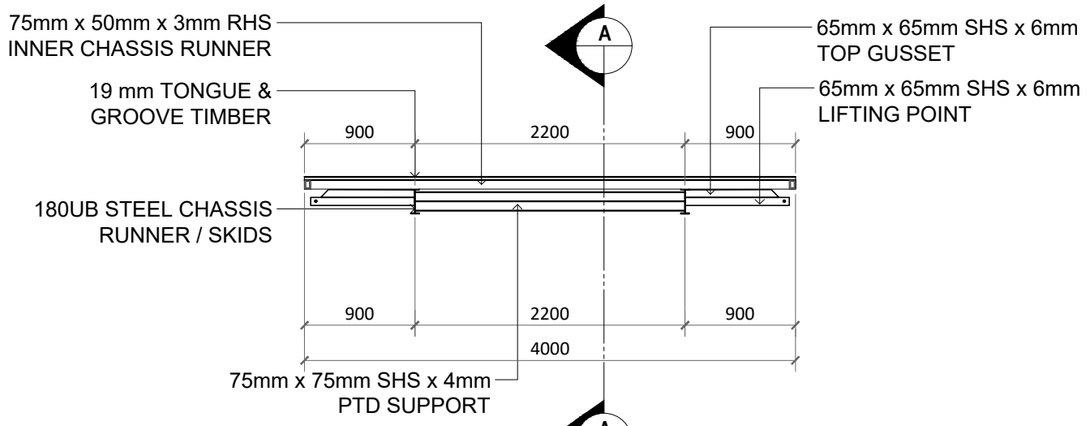

BUILDING "B"

SECTION THRU "B"

2 / S4

SCALE 1 : 50

REV # 7

BCC DS
RECEIVED
02/11/2026
APPLICATION REF
A006908306

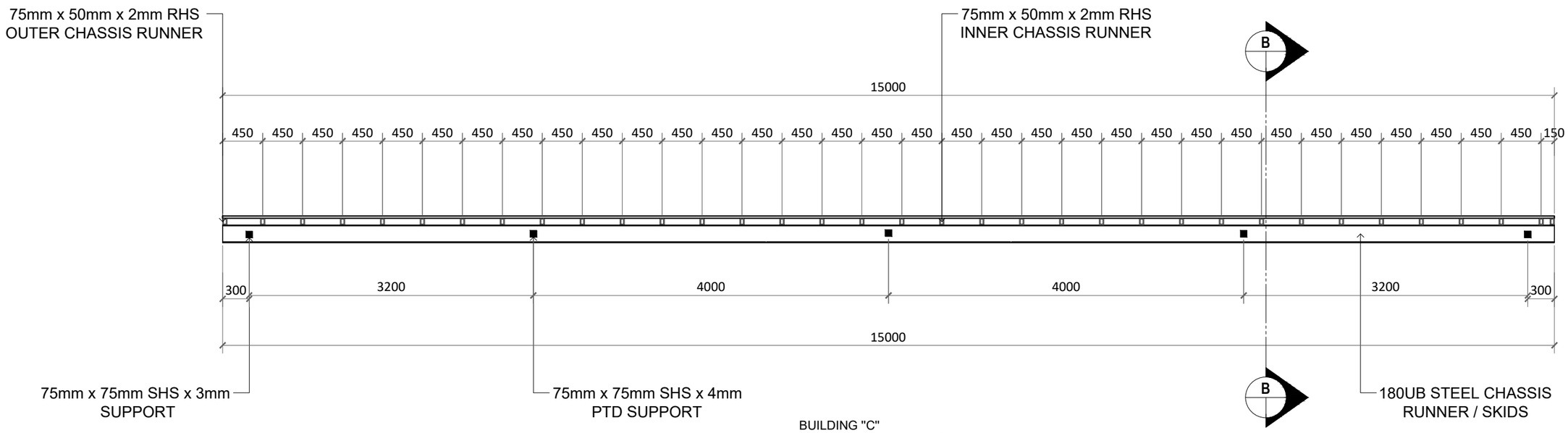

BUILDING "C"

SECTION THRU "A"

1 / S5

SCALE 1 : 50

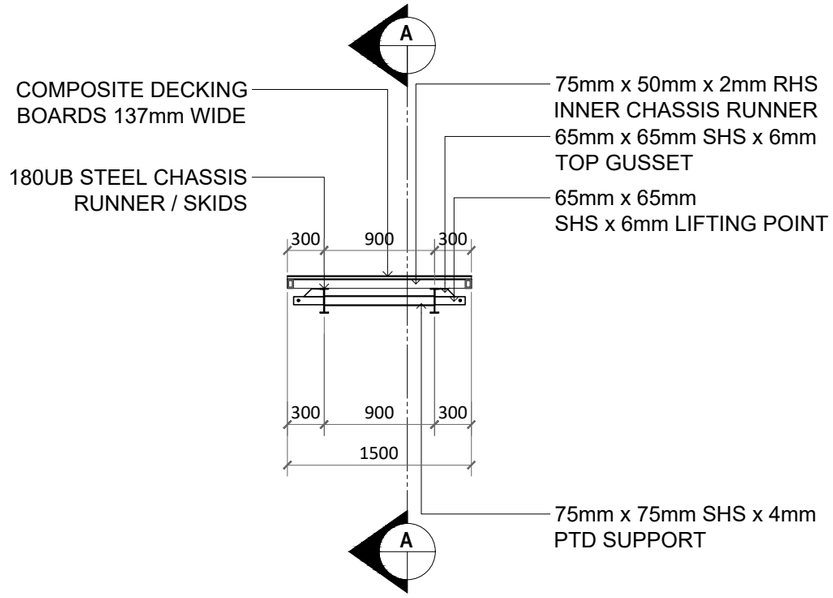

BUILDING "C"

SECTION THRU "B"

2 / S5

SCALE 1 : 50

AFFORDABLE MODULAR BUILDINGS
PORTABLE BUILDING GROUP PTY LTD ABN: 54 655 549 241
TRANSPORTABLE BUILDINGS
RESIDENTIAL & COMMERCIAL
OFFICES / ABLUTION BLOCKS / WORKERS ACCOMMODATION / LUNCH ROOMS / TINY HOMES / GRANNY FLATS / SHIPPING CONTAINER MODIFICATIONS / HOME OFFICES

PROJECT : PORTABLE BUILDINGS JOINED - 2 x 4.0m WIDE x 15.0m LONG & 4.0m WIDE x 11.0m w/ DECK & PATIO
CLIENT: Inv 1027 - VIVIENNE WILLIAMS
PROJECT LOCATION: 487 ELLISON ROAD, ASPLEY, QLD 4034

REV # 7

BCC DS
RECEIVED
02/11/2026
APPLICATION REF
A006908306

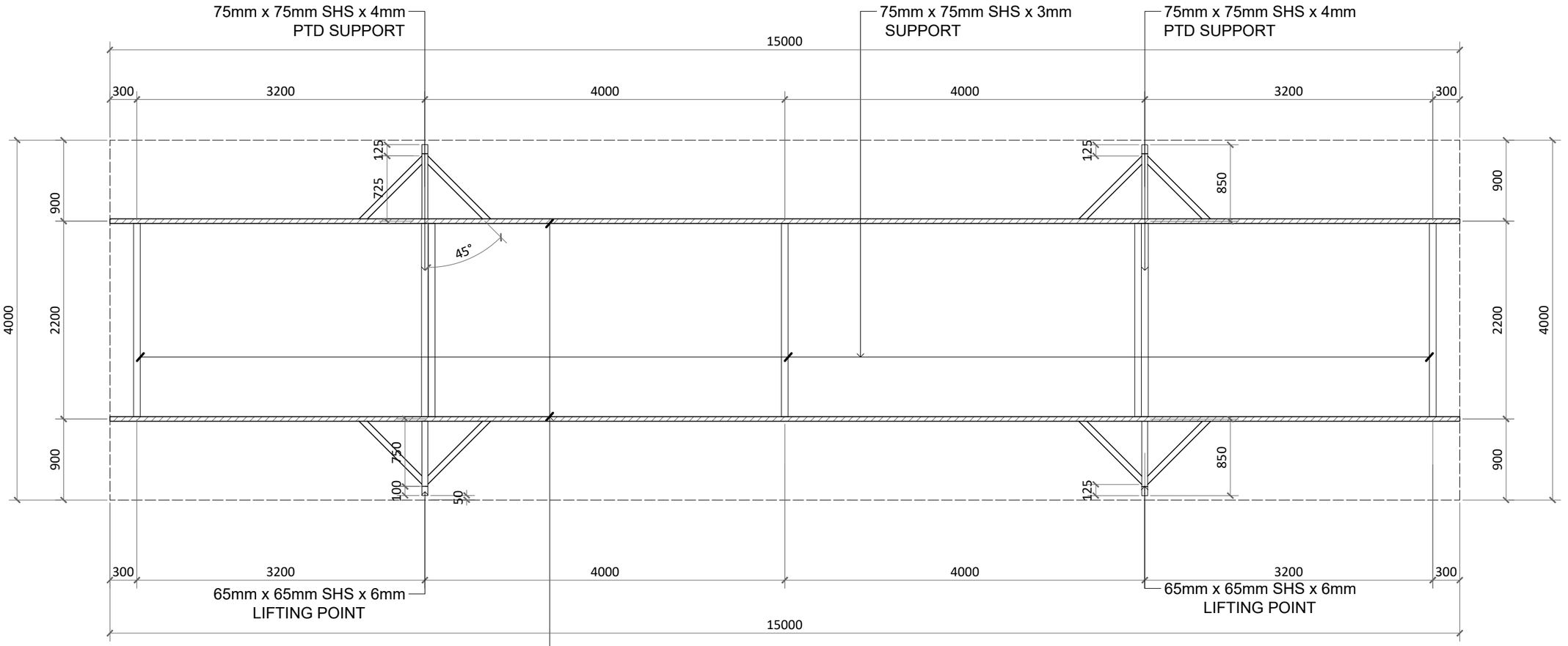

BUILDING "A"

1/S6 SKID BASE LAYOUT PLAN

SCALE 1 : 50

AFFORDABLE MODULAR BUILDINGS
PORTABLE BUILDING GROUP PTY LTD ABN: 54 655 549 241
TRANSPORTABLE BUILDINGS
RESIDENTIAL & COMMERCIAL
OFFICES / ABLUTION BLOCKS / WORKERS ACCOMMODATION / LUNCH ROOMS / TINY HOMES / GRANNY FLATS / SHIPPING CONTAINER MODIFICATIONS / HOME OFFICES

PROJECT : PORTABLE BUILDINGS JOINED - 2 x 4.0m WIDE x 15.0m LONG & 4.0m WIDE x 11.0m w/ DECK & PATIO
CLIENT: Inv 1027 - VIVIENNE WILLIAMS
PROJECT LOCATION: 487 ELLISON ROAD, ASPLEY, QLD 4034

REV # 7

BCC DS
RECEIVED
02/11/2026
APPLICATION REF
A006908306

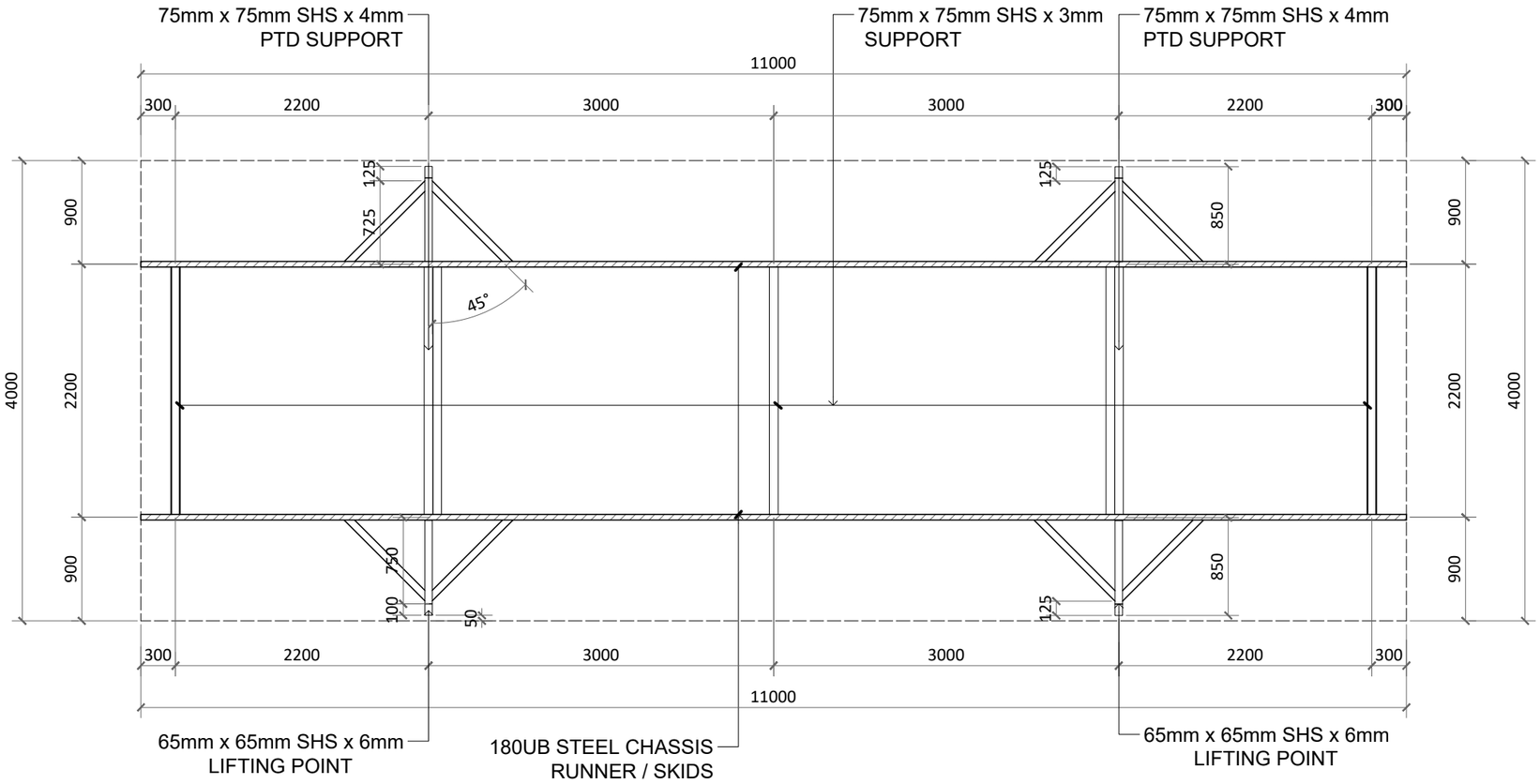

BUILDING "B"

1/S7 SKID BASE LAYOUT PLAN

SCALE 1 : 50

AFFORDABLE MODULAR BUILDINGS
PORTABLE BUILDING GROUP PTY LTD ABN: 54 655 549 241
TRANSPORTABLE BUILDINGS
RESIDENTIAL & COMMERCIAL
OFFICES / ABLUTION BLOCKS / WORKERS ACCOMMODATION / LUNCH ROOMS / TINY HOMES / GRANNY FLATS / SHIPPING CONTAINER MODIFICATIONS / HOME OFFICES

PROJECT : PORTABLE BUILDINGS JOINED - 2 x 4.0m WIDE x 15.0m LONG & 4.0m WIDE x 11.0m w/ DECK & PATIO
CLIENT: Inv 1027 - VIVIENNE WILLIAMS
PROJECT LOCATION: 487 ELLISON ROAD, ASPLEY, QLD 4034

REV # 7

BCC DS
RECEIVED
02/11/2026
APPLICATION REF
A006908306

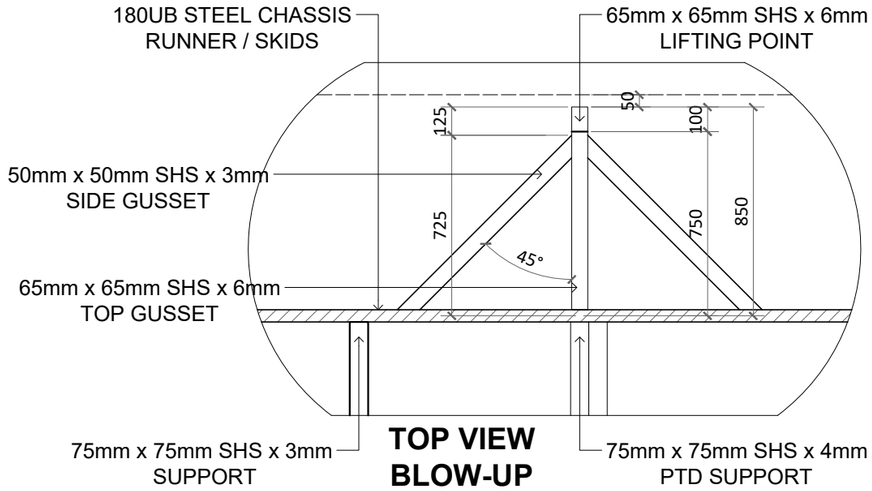

TOP VIEW BLOW-UP

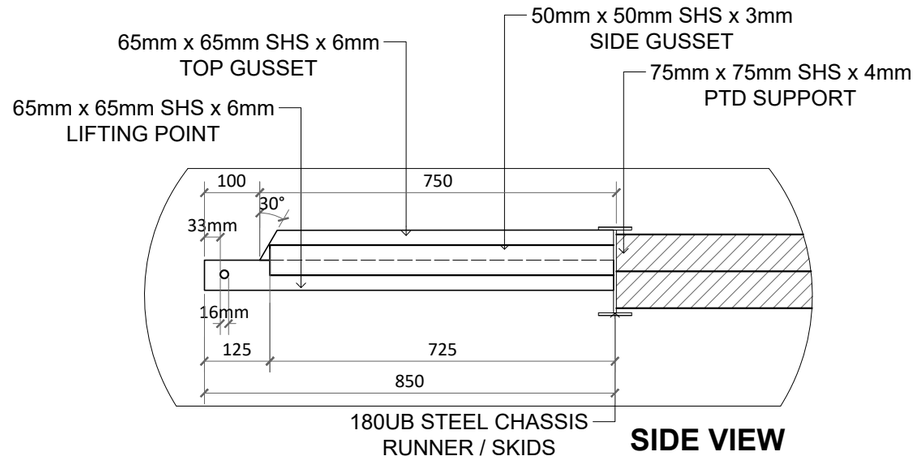

SIDE VIEW BLOW-UP

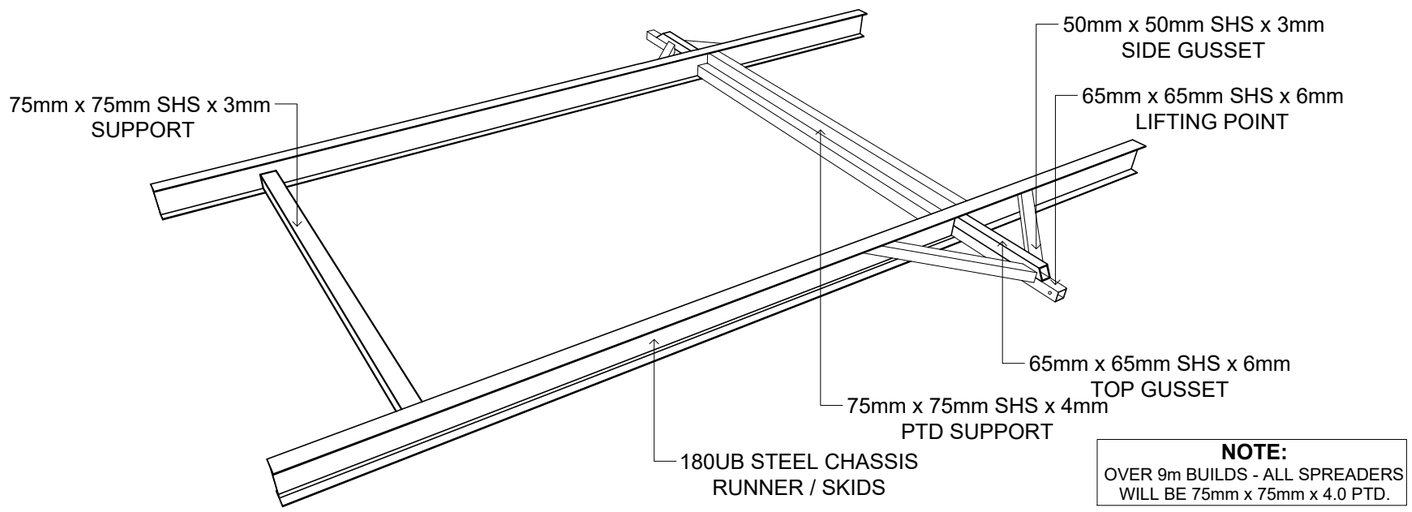

NOTE:
OVER 9m BUILDS - ALL SPREADERS WILL BE 75mm x 75mm x 4.0 PTD.

1/S8 SKID BASE INSTALLATION DETAIL

NOT TO SCALE

AFFORDABLE MODULAR BUILDINGS
PORTABLE BUILDING GROUP PTY LTD ABN: 54 655 549 241
TRANSPORTABLE BUILDINGS
RESIDENTIAL & COMMERCIAL
OFFICES / ABLUTION BLOCKS / WORKERS ACCOMMODATION / LUNCH ROOMS / TINY HOMES / GRANNY FLATS / SHIPPING CONTAINER MODIFICATIONS / HOME OFFICES

PROJECT : PORTABLE BUILDINGS JOINED - 2 x 4.0m WIDE x 15.0m LONG & 4.0m WIDE x 11.0m w/ DECK & PATIO
CLIENT: Inv 1027 - VIVIENNE WILLIAMS
PROJECT LOCATION: 487 ELLISON ROAD, ASPLEY, QLD 4034

REV # 7

BCC DS
RECEIVED
02/11/2026
APPLICATION REF
A006908306

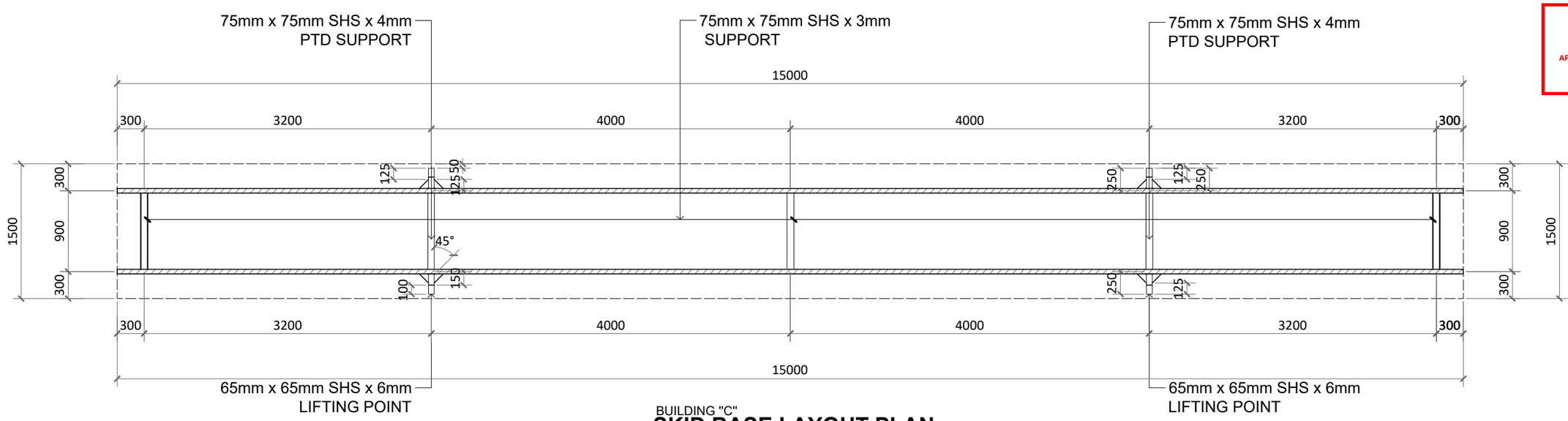

BUILDING "C"

SKID BASE LAYOUT PLAN

1/S9 SCALE 1 : 50

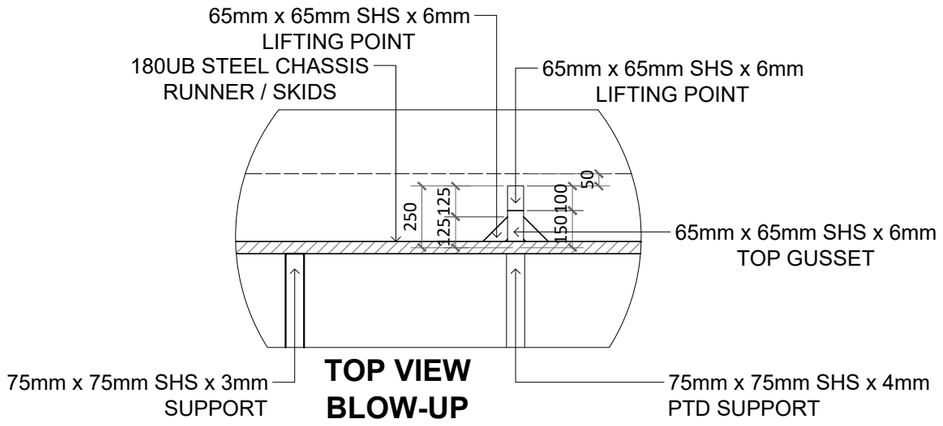

TOP VIEW BLOW-UP

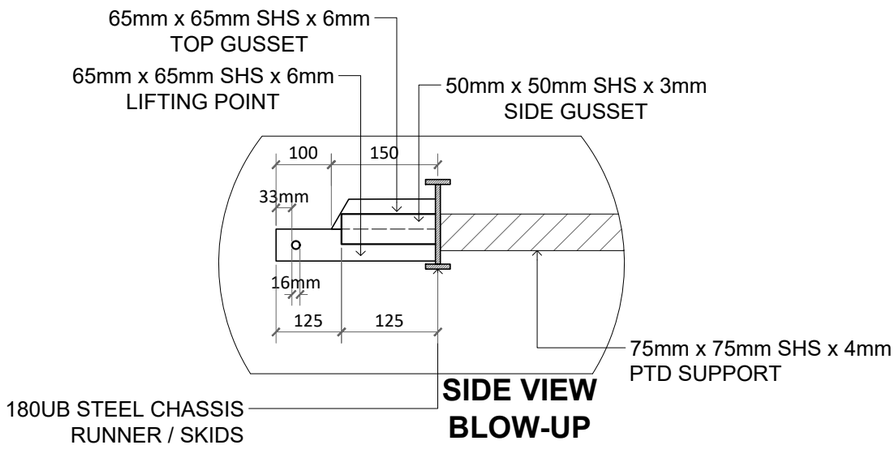

SIDE VIEW BLOW-UP

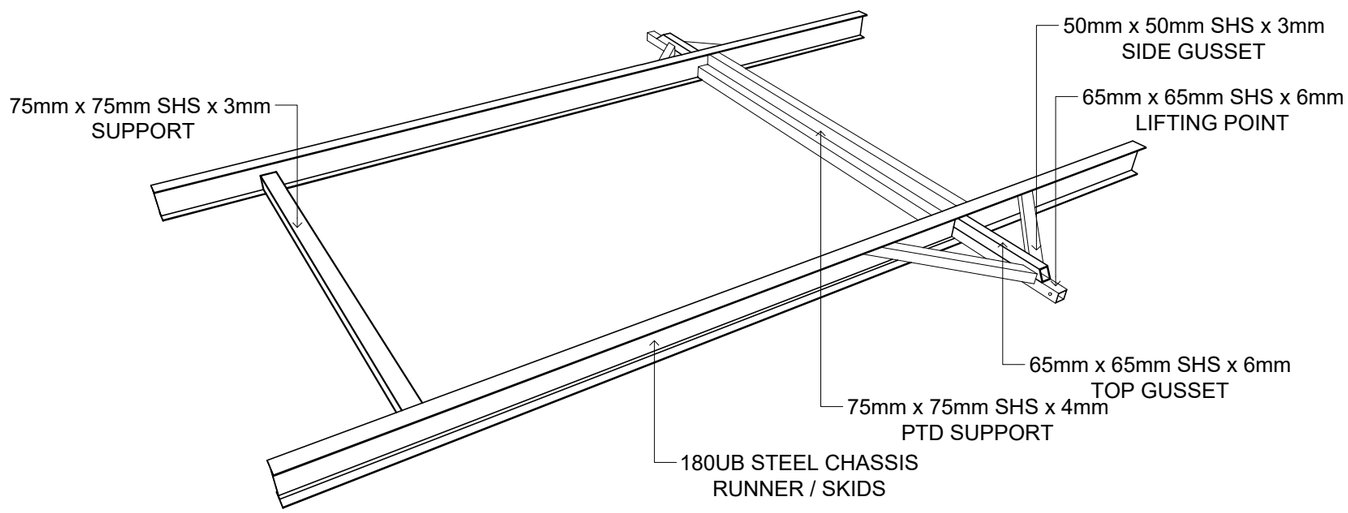

NOTE:
OVER 9m BUILDS - ALL SPREADERS WILL BE 75mm x 75mm x 4.0 PTD.

SKID BASE INSTALLATION DETAIL

2/S9 NOT TO SCALE

AFFORDABLE MODULAR BUILDINGS
PORTABLE BUILDING GROUP PTY LTD ABN: 54 655 549 241
TRANSPORTABLE BUILDINGS RESIDENTIAL & COMMERCIAL
OFFICES / ABLUTION BLOCKS / WORKERS ACCOMMODATION / LUNCH ROOMS / TINY HOMES / GRANNY FLATS / SHIPPING CONTAINER MODIFICATIONS / HOME OFFICES

PROJECT : PORTABLE BUILDINGS JOINED - 2 x 4.0m WIDE x 15.0m LONG & 4.0m WIDE x 11.0m w/ DECK & PATIO
CLIENT: Inv 1027 - VIVIENNE WILLIAMS
PROJECT LOCATION: 487 ELLISON ROAD, ASPLEY, QLD 4034

REV # 7

BCC DS
RECEIVED
02/11/2026
APPLICATION REF
A006908306

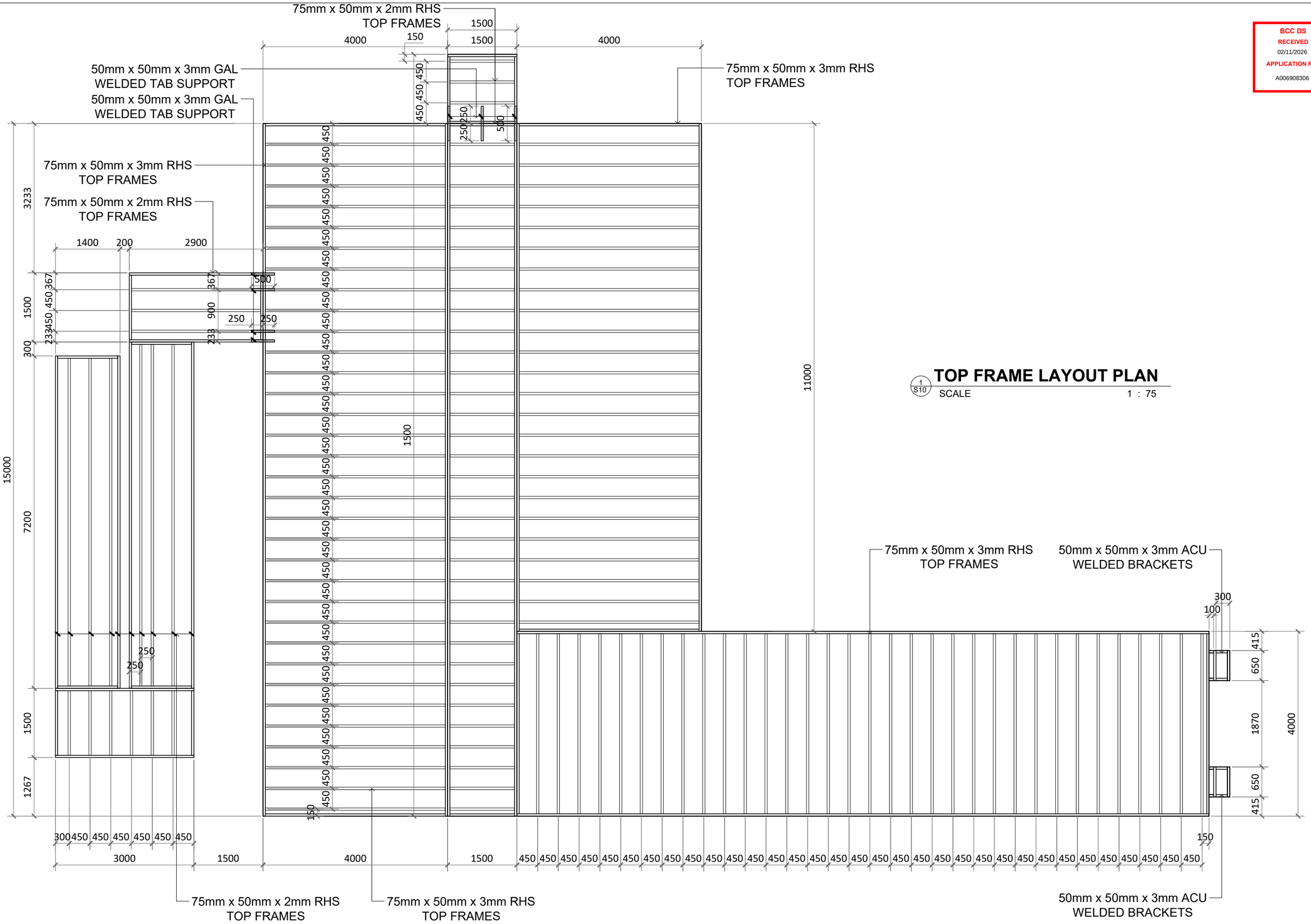

TOP FRAME LAYOUT PLAN

1 / S10 SCALE 1 : 75

AFFORDABLE MODULAR BUILDINGS
PORTABLE BUILDING GROUP PTY LTD ABN: 54 655 549 241
TRANSPORTABLE BUILDINGS
RESIDENTIAL & COMMERCIAL
OFFICES / ABLUTION BLOCKS / WORKERS ACCOMMODATION / LUNCH ROOMS / TINY HOMES / GRANNY FLATS / SHIPPING CONTAINER MODIFICATIONS / HOME OFFICES

PROJECT : PORTABLE BUILDINGS JOINED - 2 x 4.0m WIDE x 15.0m LONG & 4.0m WIDE x 11.0m w/ DECK & PATIO
CLIENT: Inv 1027 - VIVIENNE WILLIAMS
PROJECT LOCATION: 487 ELLISON ROAD, ASPLEY, QLD 4034

REV # 7

BCC DS
RECEIVED
02/11/2026
APPLICATION REF
A006908306

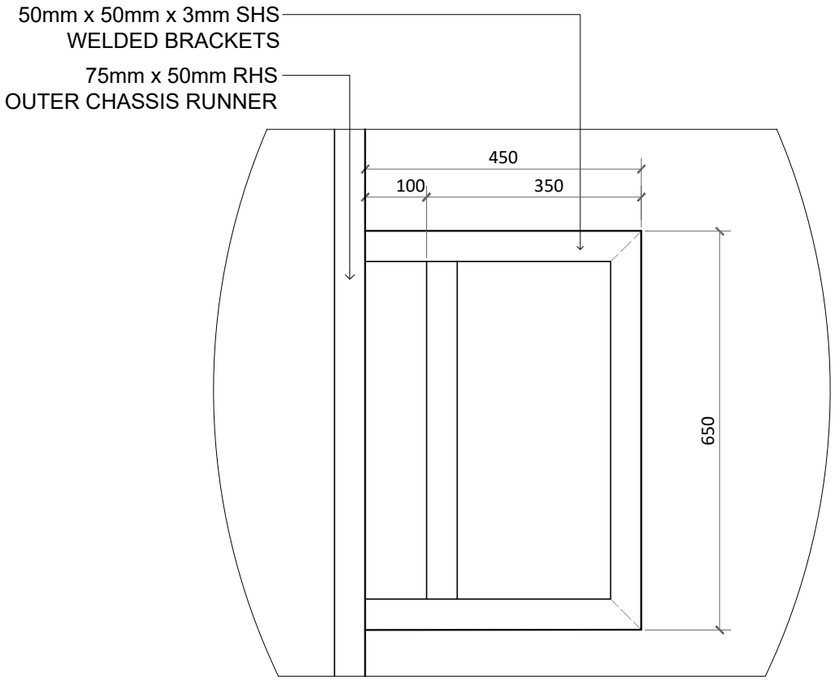

TOP VIEW
BLOW-UP

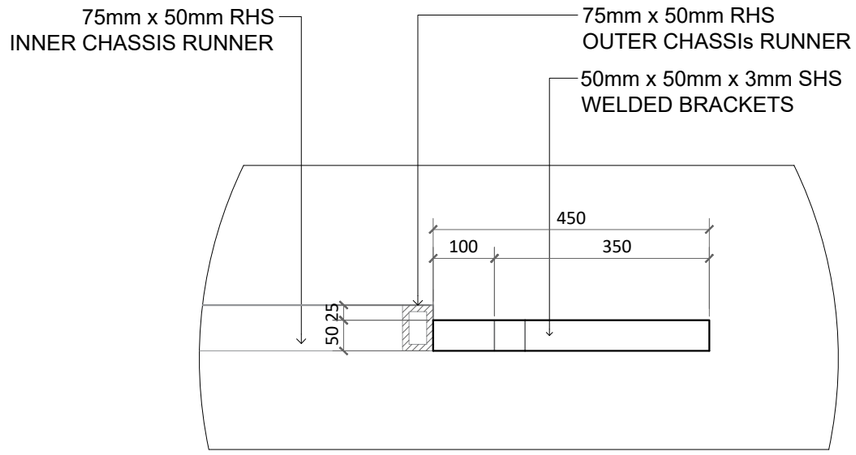

SIDE VIEW
BLOW-UP

1/S11 ACU BRACKET BLOW-UP DETAIL

SCALE: 1 : 10

AFFORDABLE MODULAR BUILDINGS
PORTABLE BUILDING GROUP PTY LTD ABN: 54 655 549 241
TRANSPORTABLE BUILDINGS
RESIDENTIAL & COMMERCIAL
OFFICES / ABLUTION BLOCKS / WORKERS ACCOMMODATION / LUNCH ROOMS / TINY HOMES / GRANNY FLATS / SHIPPING CONTAINER MODIFICATIONS / HOME OFFICES

PROJECT : PORTABLE BUILDINGS JOINED - 2 x 4.0m WIDE x 15.0m LONG & 4.0m WIDE x 11.0m w/ DECK & PATIO
CLIENT: Inv 1027 - VIVIENNE WILLIAMS
PROJECT LOCATION: 487 ELLISON ROAD, ASPLEY, QLD 4034

REV # 7

BCC DS
RECEIVED
02/11/2026
APPLICATION REF
A006908306

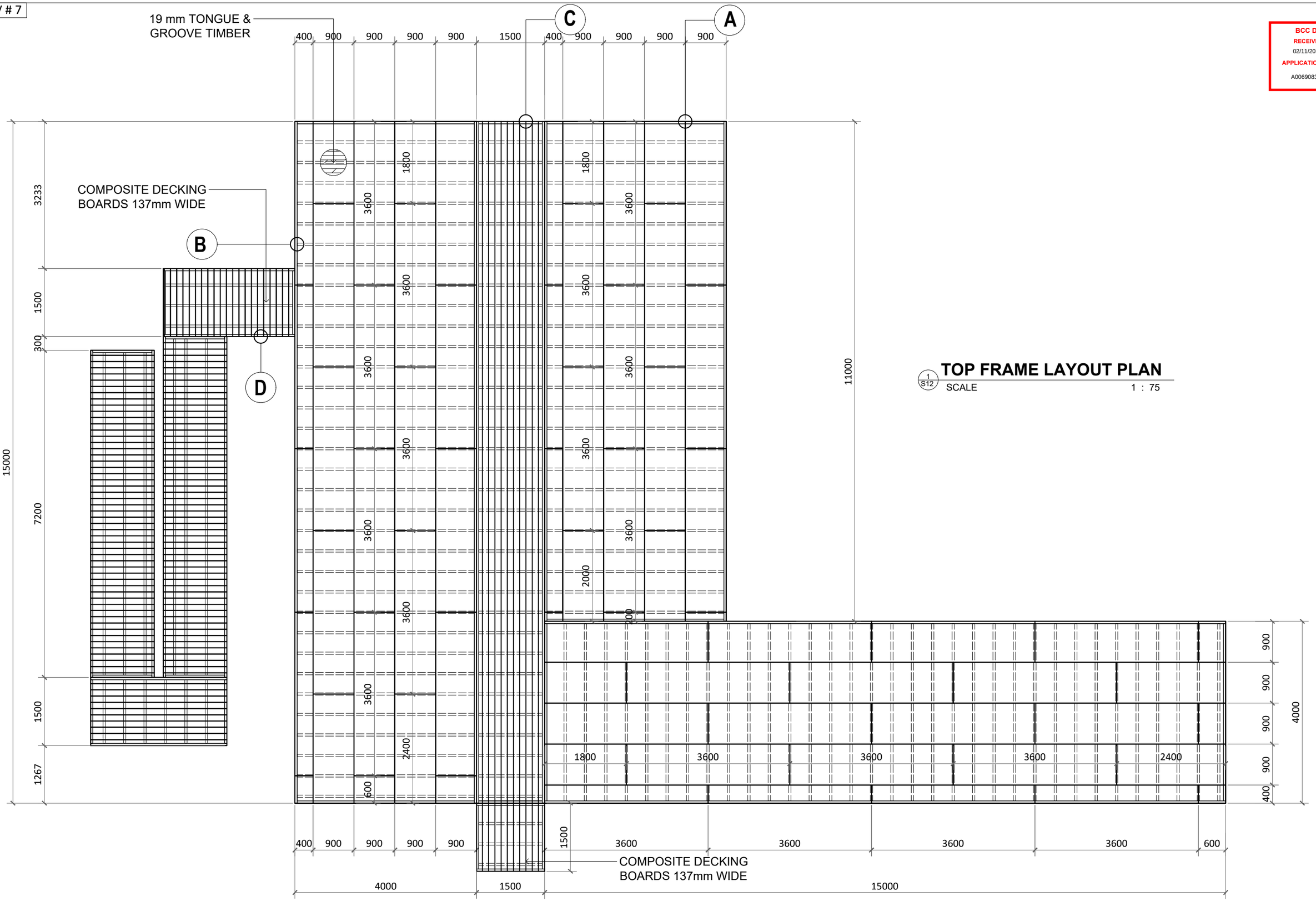

TOP FRAME LAYOUT PLAN

1 / S12

SCALE 1 : 75

AFFORDABLE MODULAR BUILDINGS
PORTABLE BUILDING GROUP PTY LTD ABN: 54 655 549 241
TRANSPORTABLE BUILDINGS RESIDENTIAL & COMMERCIAL
OFFICES / ABLUTION BLOCKS / WORKERS ACCOMMODATION / LUNCH ROOMS / TINY HOMES / GRANNY FLATS / SHIPPING CONTAINER MODIFICATIONS / HOME OFFICES

PROJECT : PORTABLE BUILDINGS JOINED - 2 x 4.0m WIDE x 15.0m LONG & 4.0m WIDE x 11.0m w/ DECK & PATIO
CLIENT: Inv 1027 - VIVIENNE WILLIAMS
PROJECT LOCATION: 487 ELLISON ROAD, ASPLEY, QLD 4034

REV # 7

BCC DS
RECEIVED
02/11/2026
APPLICATION REF
A006908306

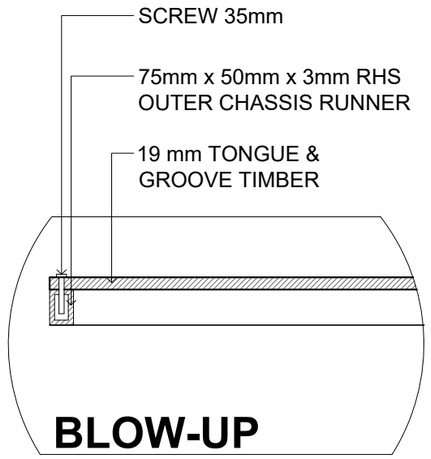

2/S13 **FLOOR INSTALLATION DETAIL "A"**
NOT TO SCALE

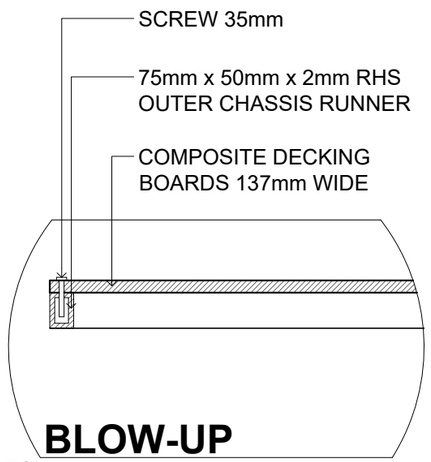

DECK
3/S13 **FLOOR INSTALLATION DETAIL "C"**
NOT TO SCALE

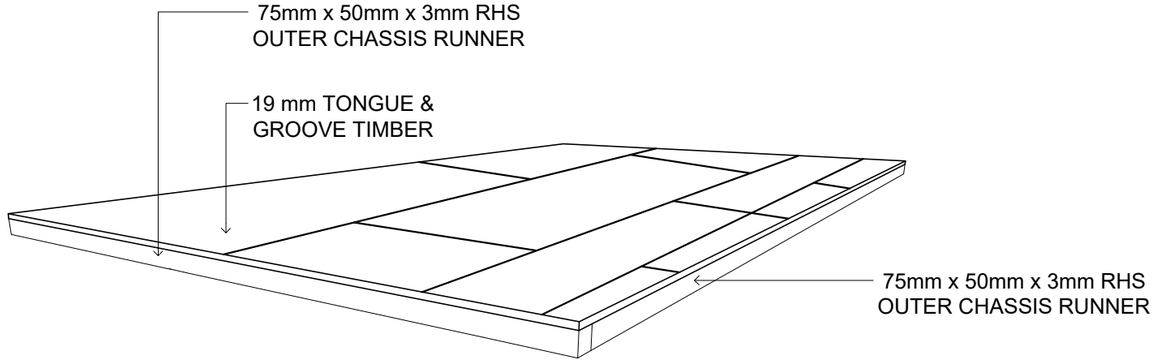

1/S13 **FLOOR INSTALLATION DETAIL "B"**
NOT TO SCALE

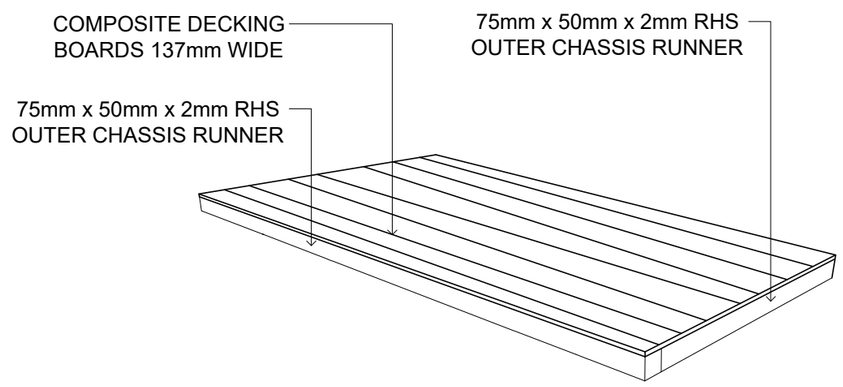

DECK
4/S13 **FLOOR INSTALLATION DETAIL "D"**
NOT TO SCALE

AFFORDABLE MODULAR BUILDINGS
PORTABLE BUILDING GROUP PTY LTD ABN: 54 655 549 241
TRANSPORTABLE BUILDINGS
RESIDENTIAL & COMMERCIAL
OFFICES / ABLUTION BLOCKS / WORKERS ACCOMMODATION / LUNCH ROOMS / TINY HOMES / GRANNY FLATS / SHIPPING CONTAINER MODIFICATIONS / HOME OFFICES

PROJECT : PORTABLE BUILDINGS JOINED - 2 x 4.0m WIDE x 15.0m LONG & 4.0m WIDE x 11.0m w/ DECK & PATIO
CLIENT: Inv 1027 - VIVIENNE WILLIAMS
PROJECT LOCATION: 487 ELLISON ROAD, ASPLEY, QLD 4034

REV # 7

BCC DS
RECEIVED
02/11/2026
APPLICATION REF
A006908306

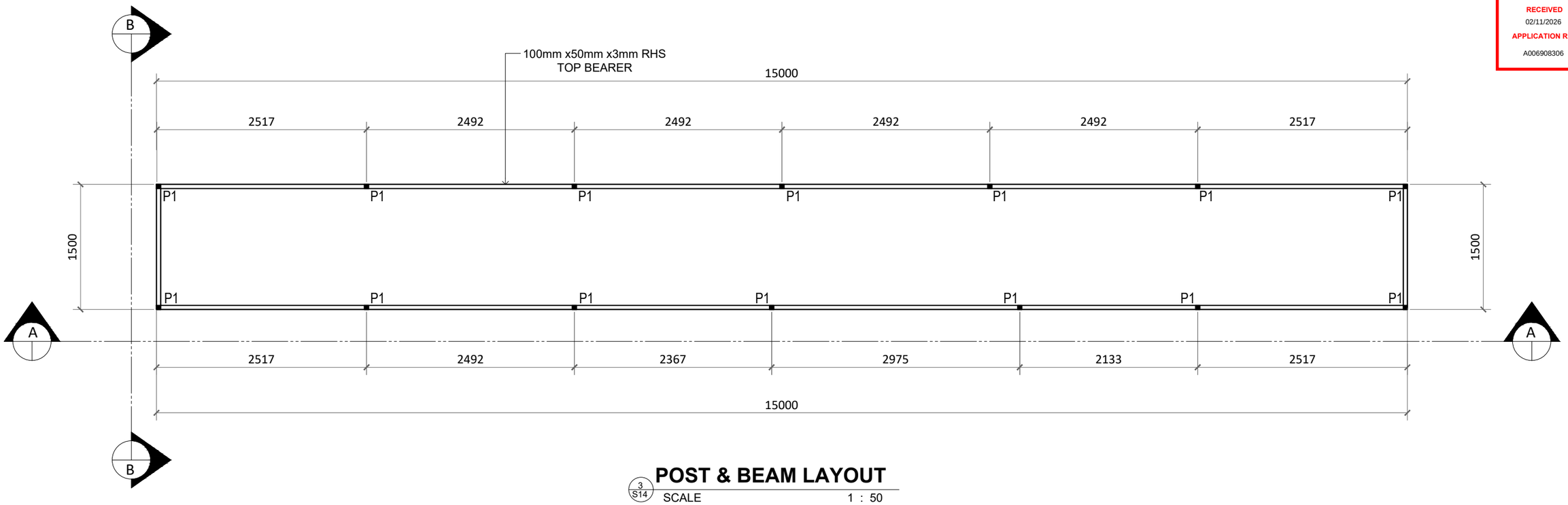

POST & BEAM LAYOUT

3 S14

SCALE 1 : 50

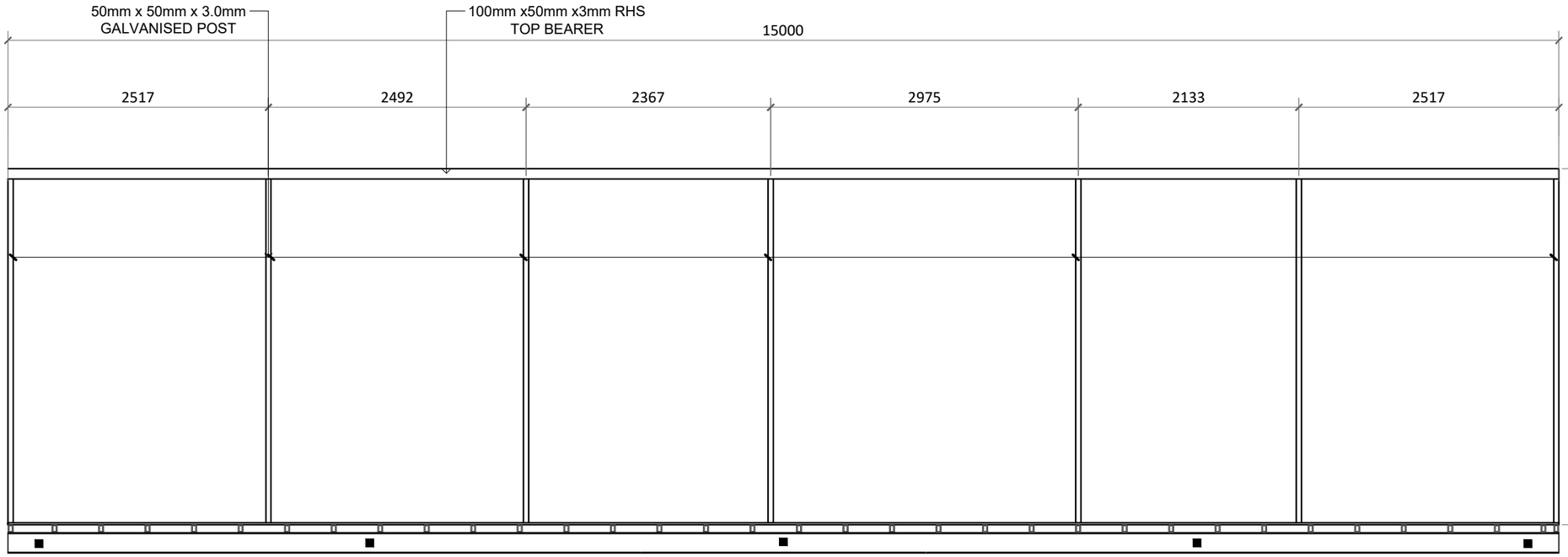

BUILDING "C"

SECTION THRU "A"

1 S14

SCALE 1 : 50

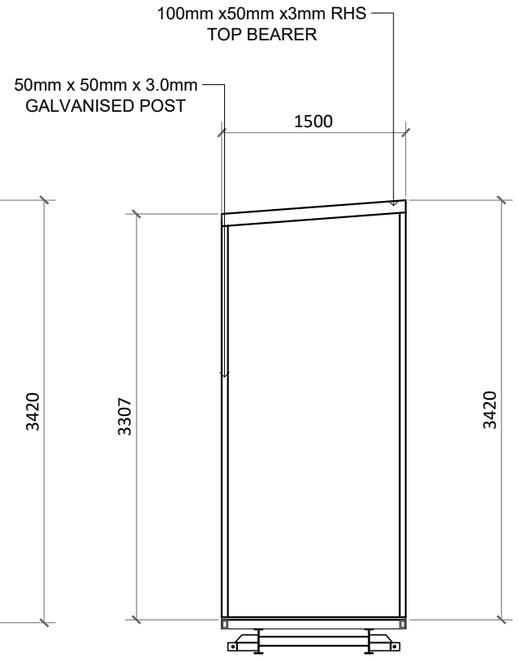

BUILDING "C"

SECTION THRU "B"

2 S14

SCALE 1 : 50

AFFORDABLE MODULAR BUILDINGS
PORTABLE BUILDING GROUP PTY LTD ABN: 54 655 549 241
TRANSPORTABLE BUILDINGS
RESIDENTIAL & COMMERCIAL
OFFICES / ABLUTION BLOCKS / WORKERS ACCOMMODATION / LUNCH ROOMS / TINY HOMES / GRANNY FLATS / SHIPPING CONTAINER MODIFICATIONS / HOME OFFICES

PROJECT : PORTABLE BUILDINGS JOINED - 2 x 4.0m WIDE x 15.0m LONG & 4.0m WIDE x 11.0m w/ DECK & PATIO
CLIENT: Inv 1027 - VIVIENNE WILLIAMS
PROJECT LOCATION: 487 ELLISON ROAD, ASPLEY, QLD 4034

REV # 7

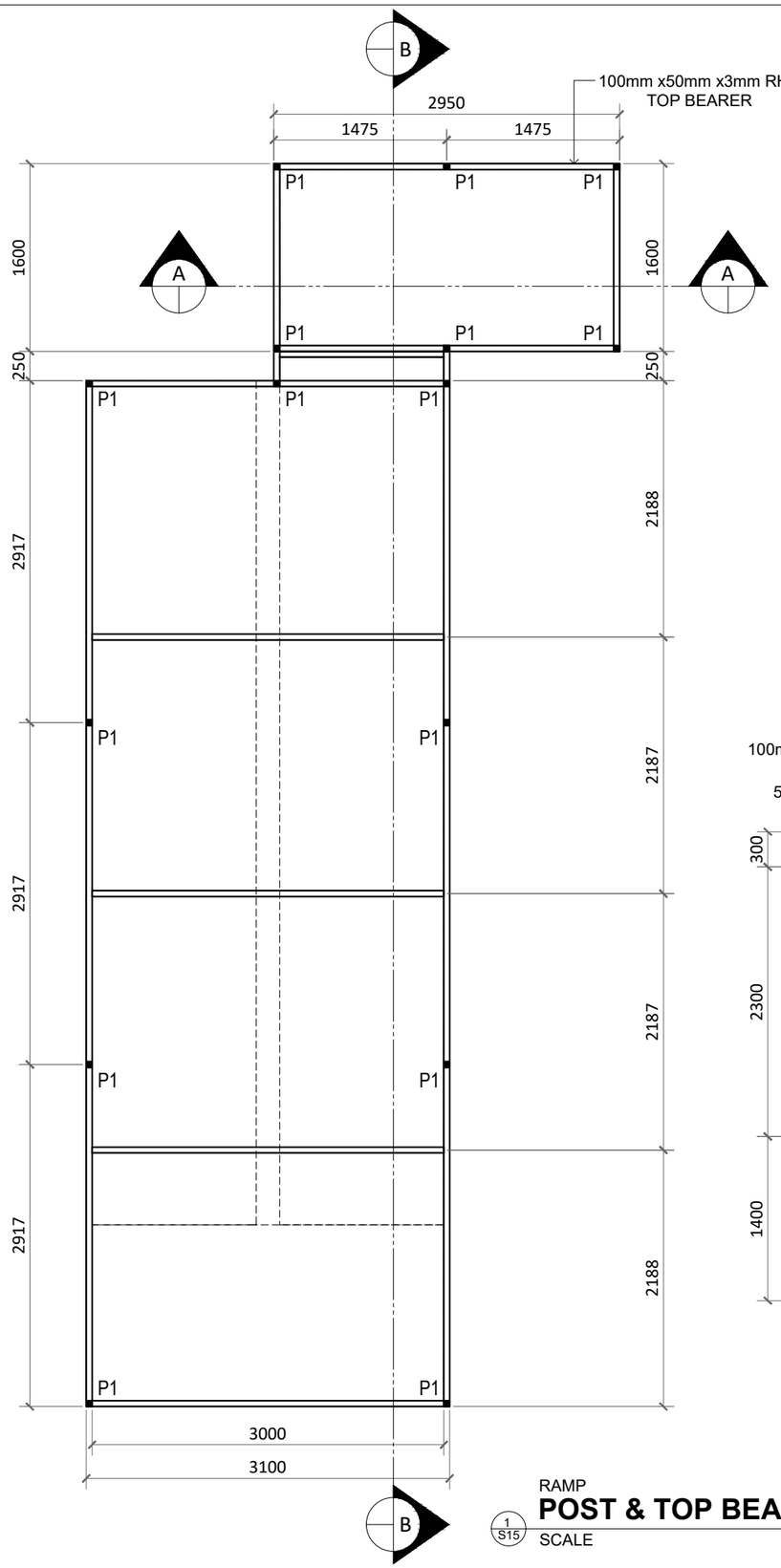

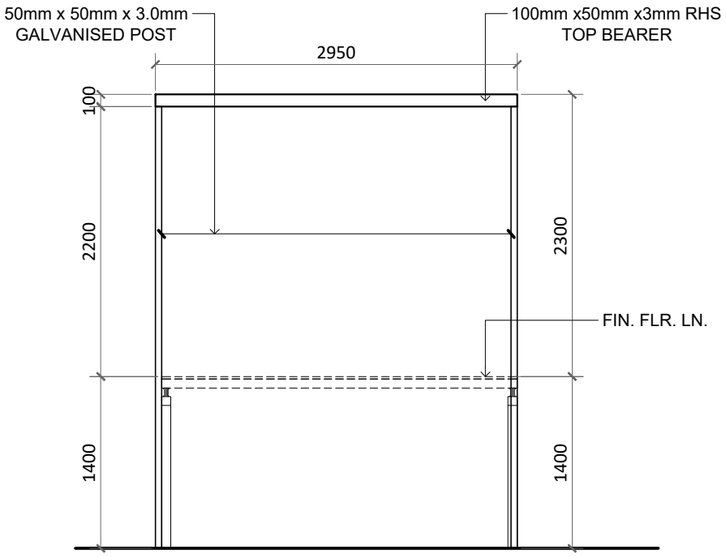

SECTION THRU "A"

2 S15

SCALE 1 : 75

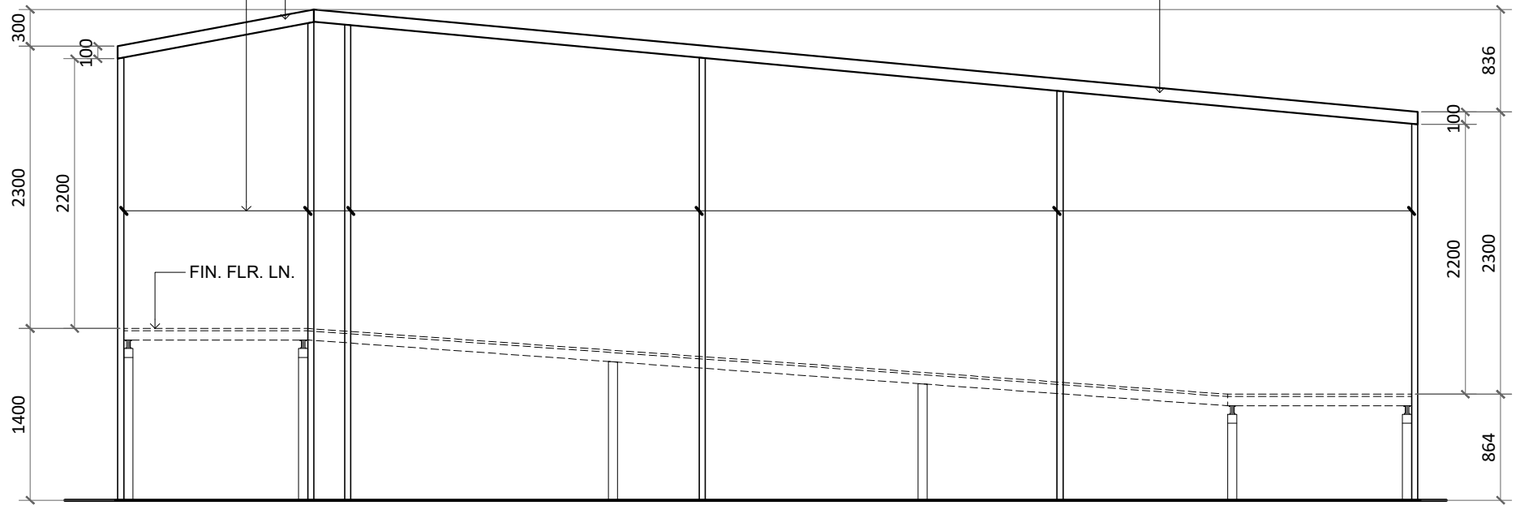

SECTION THRU "B"

3 S15

SCALE 1 : 75

RAMP

POST & TOP BEARERS LAYOUT

1 S15

SCALE 1 : 50

BCC DS
RECEIVED
02/11/2026
APPLICATION REF
A006908306

AFFORDABLE MODULAR BUILDINGS
PORTABLE BUILDING GROUP PTY LTD ABN: 54 655 549 241
TRANSPORTABLE BUILDINGS
RESIDENTIAL & COMMERCIAL
OFFICES / ABLUTION BLOCKS / WORKERS ACCOMMODATION / LUNCH ROOMS / TINY HOMES / GRANNY FLATS / SHIPPING CONTAINER MODIFICATIONS / HOME OFFICES

PROJECT : PORTABLE BUILDINGS JOINED - 2 x 4.0m WIDE x 15.0m LONG & 4.0m WIDE x 11.0m w/ DECK & PATIO
CLIENT: Inv 1027 - VIVIENNE WILLIAMS
PROJECT LOCATION: 487 ELLISON ROAD, ASPLEY, QLD 4034