G.JAMES
Windows & Doors

BCC DS
RECEIVED
20-OCT-2026
APPLICATION REF
A007135632

Sliding Door
246 Series

Photo courtesy of Dixon Homes (Cairns)

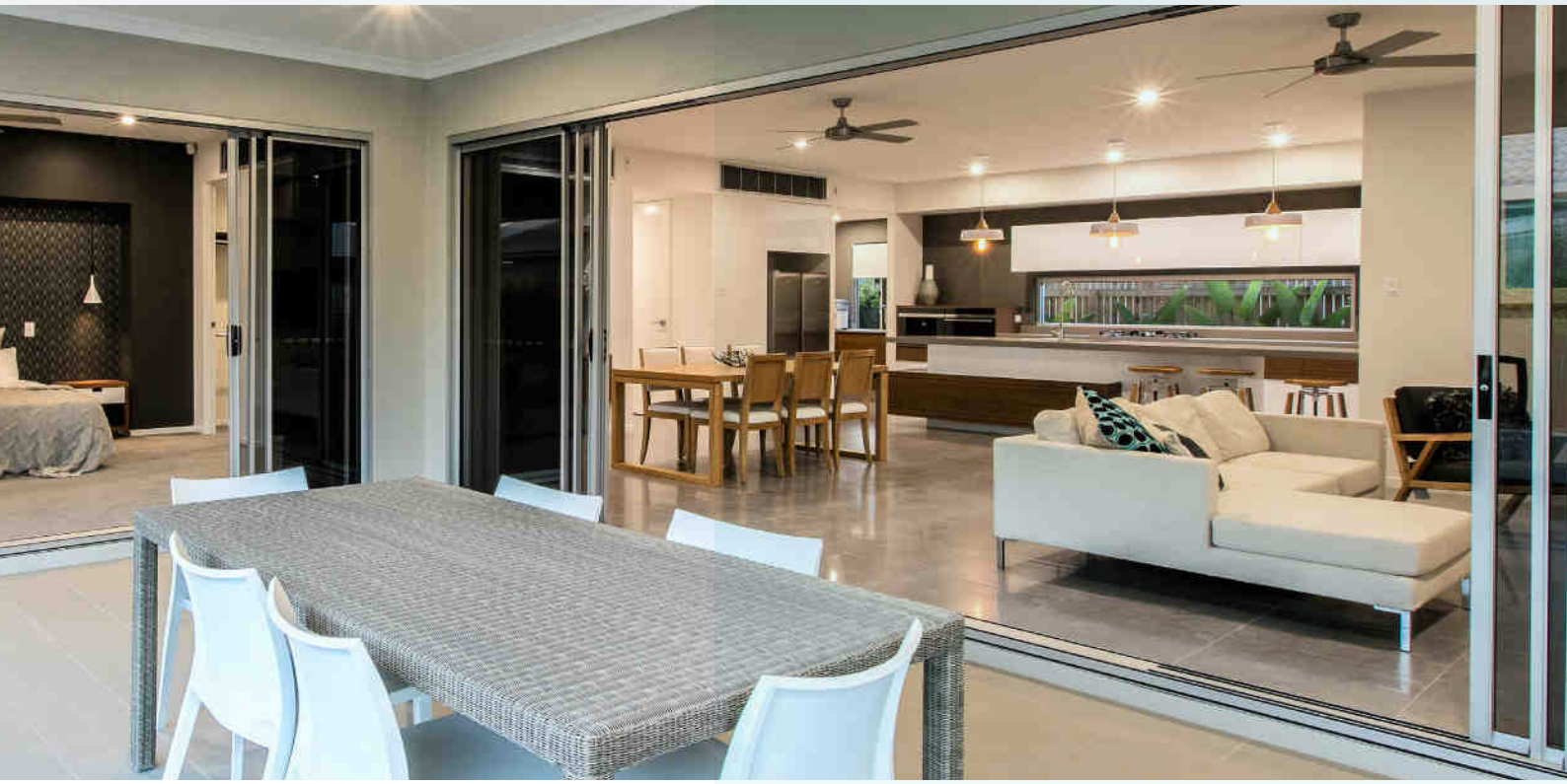

Three Track System



Five Track System



Let the G.James 246 Series Sliding Door be your gateway to the great outdoors.

Smart styling, dependable hardware and a range of designs all combine to offer you a 'premium' sliding door. An extensive choice of configurations allows you to maximise your opening space, access and ventilation.

For that something different, corner and cavity-concealed configurations are also possible.
All aspects of the 246 Series sliding door bear the inherit qualities and refinements gained from G.James' extensive history of manufacturing, NATA certified testing and site experience.

Left images: Cut-through of sliding door sills with optional barrier screen (guide only, subject to change without notice).

G.JAMES
Windows & Doors

BCC DS
RECEIVED
20-OCT-2026
APPLICATION REF
A007135632

Sliding Door
246 Series

Features

Photo courtesy of Sorensen & Caldon Builders (Taree)

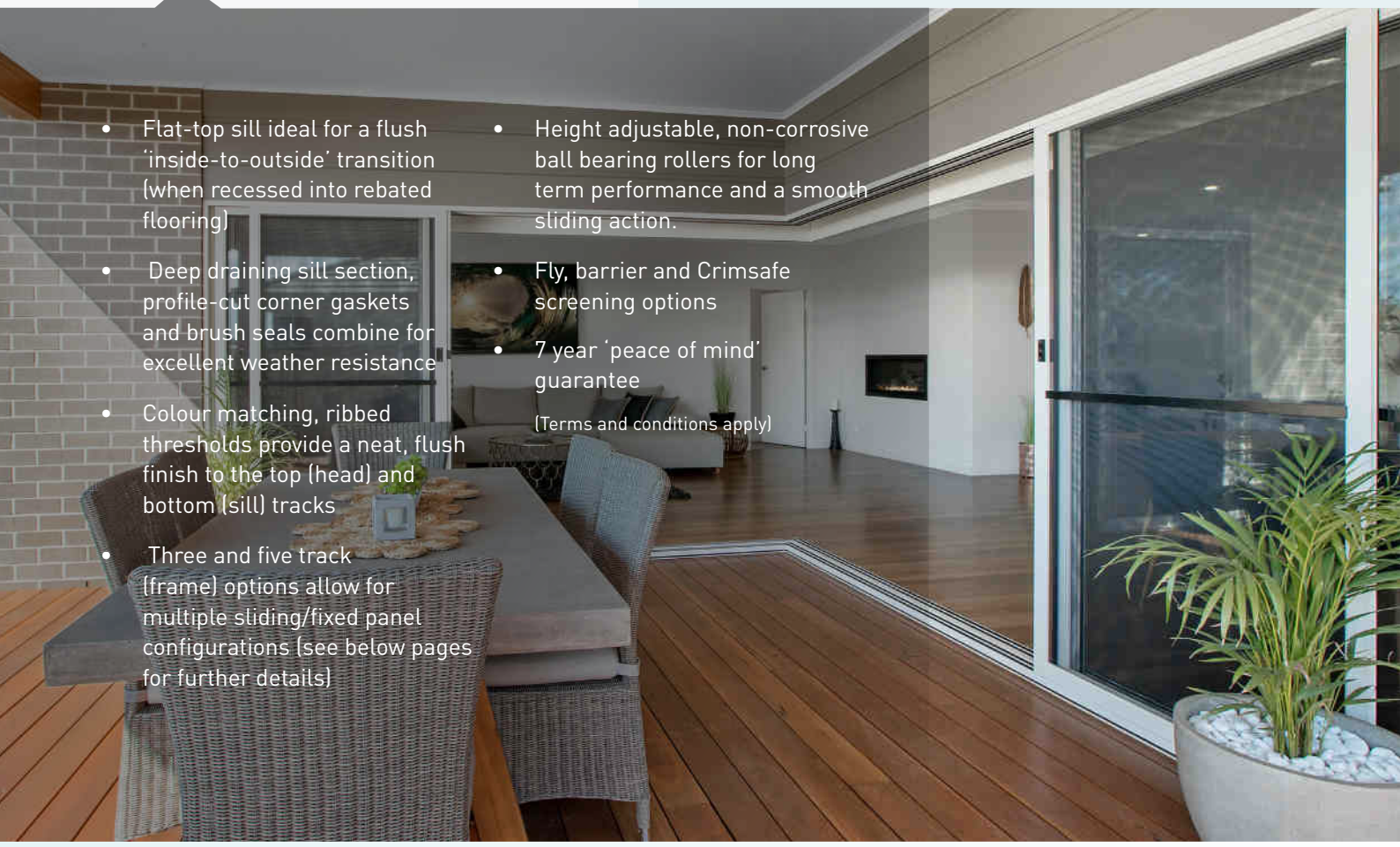

- Flat-top sill ideal for a flush 'inside-to-outside' transition (when recessed into rebated flooring)
- Deep draining sill section, profile-cut corner gaskets and brush seals combine for excellent weather resistance
- Colour matching, ribbed thresholds provide a neat, flush finish to the top (head) and bottom (sill) tracks
- Three and five track (frame) options allow for multiple sliding/fixed panel configurations (see below pages for further details)
- Height adjustable, non-corrosive ball bearing rollers for long term performance and a smooth sliding action.
- Fly, barrier and Crimsafe screening options
- 7 year 'peace of mind' guarantee

  (Terms and conditions apply)

Example Configurations

See end of brochure for standard size range and configurations.

Slider / Fixed



Slider / Slider / Fixed



Fixed / Slider / Slider / Fixed

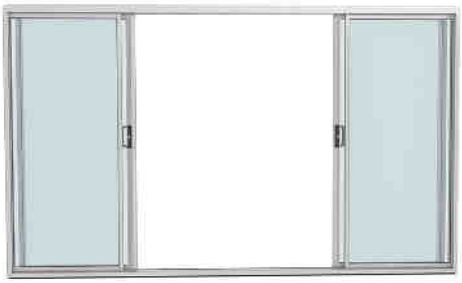

G.JAMES
Windows & Doors

BCC DS
RECEIVED
20-OCT-2026
APPLICATION REF
A007135632

Sliding Door
246 Series

Handle Options

Note: All handles are available in keyed or non-keyed options (additional charges apply for keyed options). Onyx non-keyed black 'D' handle supplied as standard. Onyx and Axiom handles also available in white and silver upon request (additional lead time and charges may apply).



Hillaldam



Onyx Slimline



Onyx 'D' Pull
Standard



Axiom Slimline
Mortice Lock



Axiom 'D' Pull
Mortice Lock

Screens

Flyscreens

G.James flyscreens are a practical and economical method to cover the open area of your windows and doors, helping to keep your home free from flies. Our flyscreens are constructed using an extruded aluminium frame and standard fibreglass mesh.

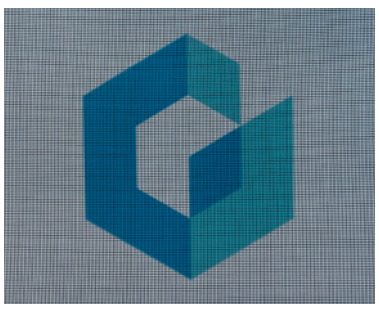

Barrier Screens

Barrier screens offer an affordable, intermediate level of security for your home. G.James' barrier screens feature black Armagrille (diamond-shaped, aluminium grille), fibreglass mesh and aluminium frame.

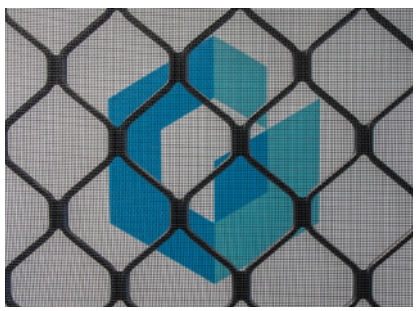

Crimsafe Screens

Crimsafe screens provide a superior level of safety and security to your windows and doors. The integral high-tensile, stainless steel mesh is discrete in appearance ensuring your views are unhindered.

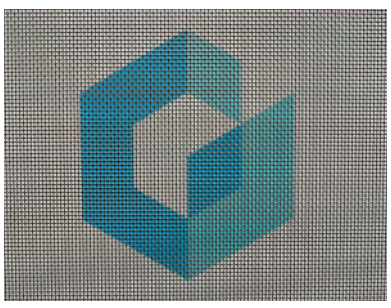

G.JAMES
Windows & Doors

BCC DS
RECEIVED
20-OCT-2026
APPLICATION REF
A007135632

Sliding Door
246 Series

Your home, your comfort, your glass

A comfortable home happens not by chance but through good design.

When specifying the windows and doors for your home, you'll make decisions in relation to ventilation, light, aesthetics and operation – all very relevant considerations.

There is however another equally important consideration that is often overlooked, and that is the type of GLASS you choose. The selection of a 'performance' glass can address such issues as heat gain, energy efficiency, security, noise and glare reduction - all of which are central to your comfort and the overall liveability of your home.

So before finalising your windows and doors don't miss the opportunity to understand and take advantage of the many benefits offered by G.James' comprehensive range of performance glass products. G.James welcomes your enquiry on how better glass selection can be the defining difference in your new build.



- Safety
- Security
- Noise
- Heat Gain
- Insulation
- Glare
- Fading

G.JAMES
Windows & Doors

BCC DS
RECEIVED
20-OCT-2026
APPLICATION REF
A007135632

Residential Colour Selector

Powdercoat Colours


Black (Satin)


Monument® (Matt)


Woodland Grey® (Satin)


Ultra Silver (Gloss)

Surfmist® (Matt)


Pearl White (Gloss)


Dune® (Satin)


Paperbark® (Satin)

IMPORTANT: The surface finishes shown represent the standard range of colours offered by G.James.

It should be noted that some finishes may not be stocked at your supplying location which may affect price and lead time. Contact your G.James representative for further information.

® Registered trade marks of BlueScope Steel Limited.

Anodised Finishes


Clear


Residential Bronze

All Anodised Finishes are price on application. All residential anodised finishes are supplied at AA15 (film thickness) with AA20 & AA25 available upon request. Polished Silver (internal products only) and other Bronze finishes are available. Contact your G.James representative for further information.

NOTE: The colour/finish swatches shown below are intended as a GUIDE ONLY and as representative as modern printing processes and computer monitors allow. G.James recommends once your choice has been narrowed, that a physical colour swatch or aluminium sample of your selected colour/finish be viewed prior to your order confirmation. G.James takes no responsibility or liability for any colour misrepresentation between this selector and the product supplied.

G.JAMES
Windows & Doors

BCC DS
RECEIVED
20-OCT-2026
APPLICATION REF
A007135632

Sliding Door
246 Series

Technical Data

Max. Height[1]	2400mm
Max. Door Panel Width[1]	1200mm
Max. Glass Thickness	• Single glaze – 6.76mm • Double glazed (IGU) – 18mm
Max. Water Performance	• Standard Sill – 300 Pa • Sub-sill Configuration – 450 Pa
Perimeter Frame Width Options	• 3 Track – 100mm • 5 Track –168mm
WERS Data[2]	• U-Value range: 4.60 – 6.50 • SHGC range: 0.31 – 0.73
Acoustics[2]	Up to Rw 35
Bushfire Attack Level	Tested and certified to BAL-40
Fixing Types	Fin fix and face fix
Compatible Construction Types:	Brick veneer, clad wall, block wall, cavity brick and modular/transportable
Air Infiltration:	This window conforms with AS2047 air infiltration requirements for air-conditioned buildings

[1] Maximum sizes are a guide only and subject to the wind rating or SLS/ULS requirements of the site.[2] Consult your G.James representative to determine the most suitable product configuration for your requirements.



Track Wear Note

A sliding door sill roller track is considered a 'wearing' part of the door, consequently over time the surface finishing of the track may show the effects of scuffing, chipping and/or wearing.

Such effects will be more noticeable on darker colours and will differ between powder coat and anodised finishes. The powder coat finish may chip or strip in short or slightly longer sections, while anodised surfaces will tend to wear but at a slower rate.

This is NOT a fault or defect with the product and will be similar across other aluminium door manufacturers.

BCC DS
RECEIVED
20-OCT-2026
APPLICATION REF
A007135632

G.JAMES
Windows & Doors

Sliding Door
246 Series

3 Track (101mm)
Standard Size Range / Configurations

Stud Opening (Frame Size with reveals + 10mm clearance)
Outer Frame Size (excludes fixing fin & reveals)

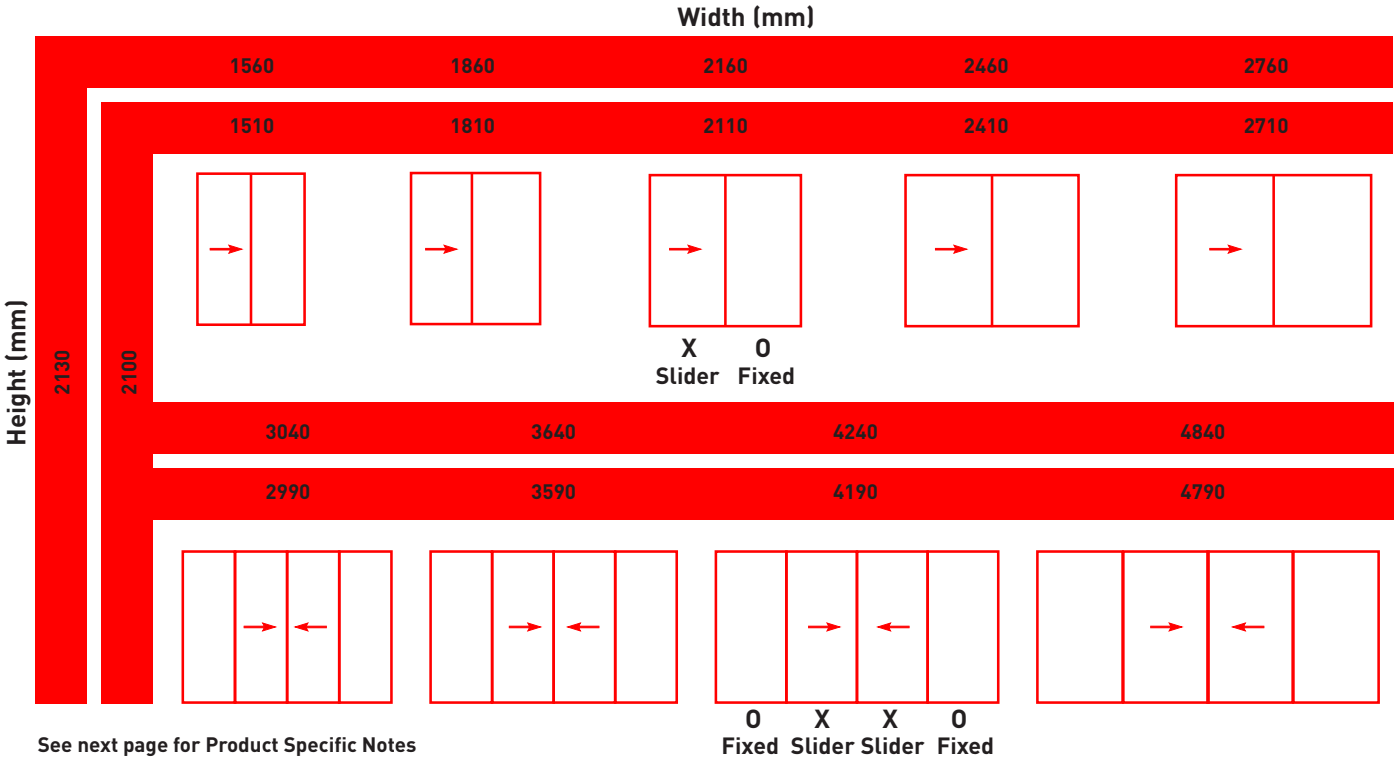

See next page for Product Specific Notes

Corner Door – Standard Size Range / Configurations

Stud Opening (Important: Refer Size Chart and Product Specific Notes below)
Outer Frame Size (excludes fixing fin & reveals)

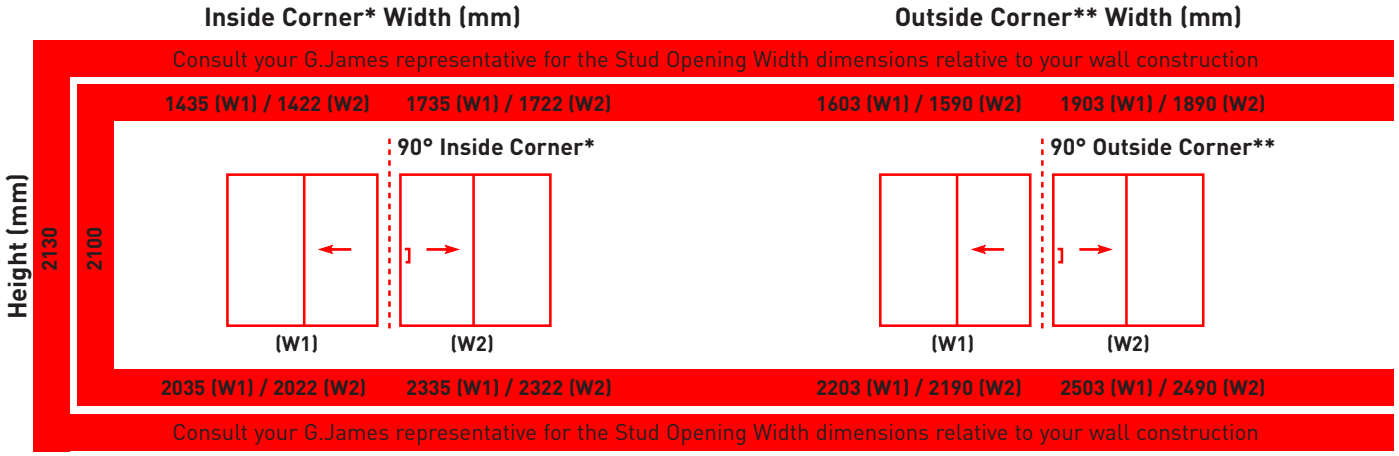

* Refer to page 9, Diagram 1 for the orientation of an *Inside* Corner configuration.

** Refer to page 9, Diagram 2 for the orientation of an *Outside* Corner configuration.

Important - Corner Door Product Specific Notes:

- Consult your G.James representative for:
  - › *Stud Opening* width dimensions relative to your wall construction
  - › Specific reference points for (W1) & (W2) dimensions
  - › Set-out details.
- The *Outer Frame Size* dimensions are based on standard size, toughened glass panels. Additional charge will apply for non-standard sizes.

BCC DS
RECEIVED
20-OCT-2026
APPLICATION REF
A007135632

Sliding Door
246 Series

5 Track (168mm)
Standard Size Range / Configurations

Stud Opening (Frame Size with reveals + 10mm clearance)
Outer Frame Size (excludes fixing fin & reveals)

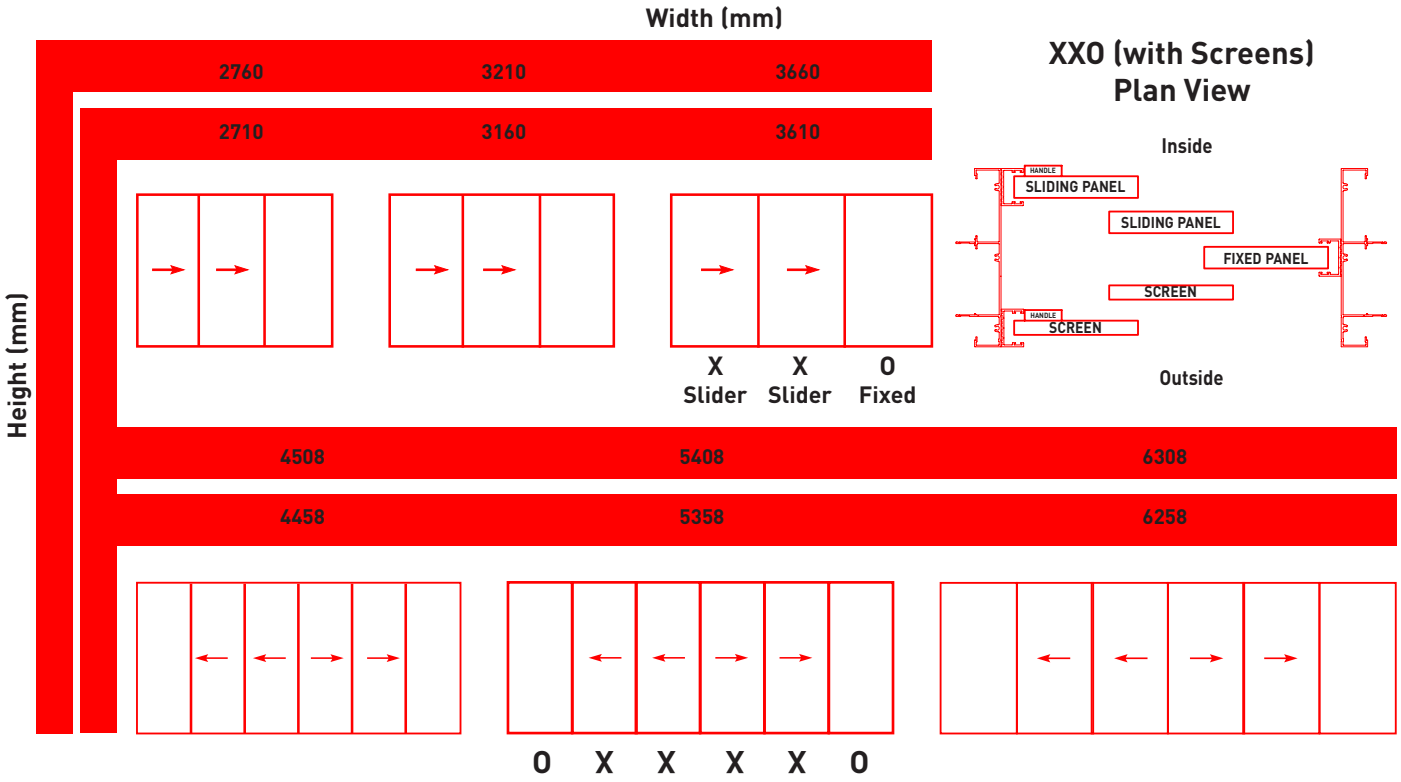

XXO (with Screens) Plan View

OXXXXO (with Screens) Plan View

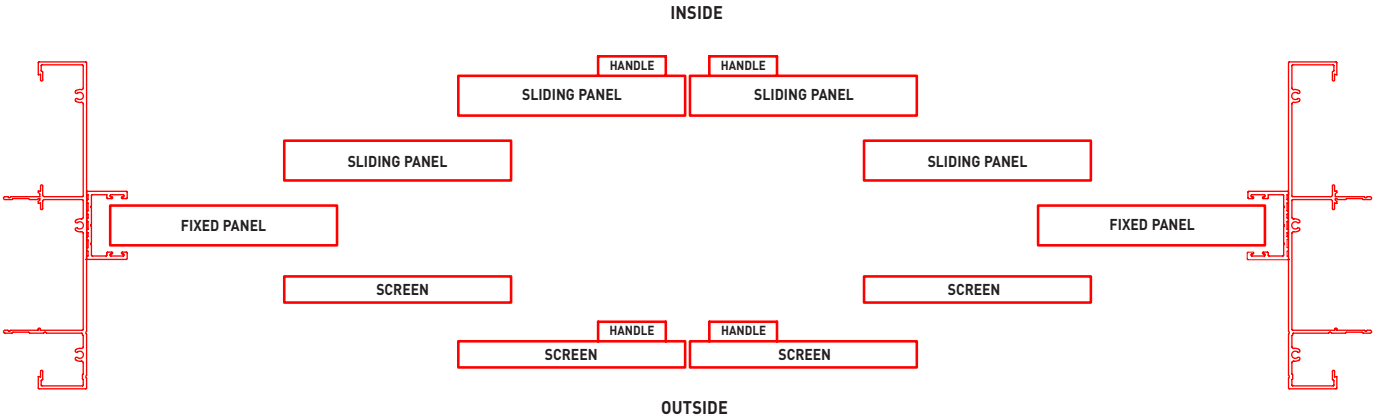

Product Specific Notes:

- All sliding panels are positioned on the inner most track(s) with any screens to the outer track(s).
- All sliding panels are positioned on the inner most track(s) with any screens to the outer track(s). This situation may differ for XXO and OXXXXO configurations - check with your G.James Representative.
- The frame size of all 2100mm high doors supplied to N5C3 (W60) category sites will be at 2054mm high.
- Sizes up to 2400mm, non-screenable configurations and low profile sill (excluding corner doors) are available on request.

G.JAMES
Windows & Doors

BCC DS
RECEIVED
20-OCT-2026
APPLICATION REF
A007135632

Sliding Door
246 Series

5 Track (168mm) Corner Door

Standard Size Range / Configurations

Stud Opening (Important: Refer Size Chart and Product Specific Notes below)
Outer Frame Size (excludes fixing fin & reveals)

Height (mm)	Inside Corner Width (mm) - see Diagram 1 below		Outside Corner Width (mm) - see Diagram 2 below	
	Consult your G.James representative for the Stud Opening Width dimensions relative to your wall construction			
	2103 (W1) / 2090 (W2)	2553 (W1) / 2540 (W2)	2404 (W1) / 2391 (W2)	2854 (W1) / 2841 (W2)
	90° Inside Corner		90° Outside Corner	
	(W1)	(W2)	(W1)	(W2)
	3003 (W1) / 2990 (W2)	3453 (W1) / 3440 (W2)	3304 (W1) / 3291 (W2)	3754 (W1) / 3741 (W2)
	Consult your G.James representative for the Stud Opening Width dimensions relative to your wall construction			

Diagram 1 – Inside Corner

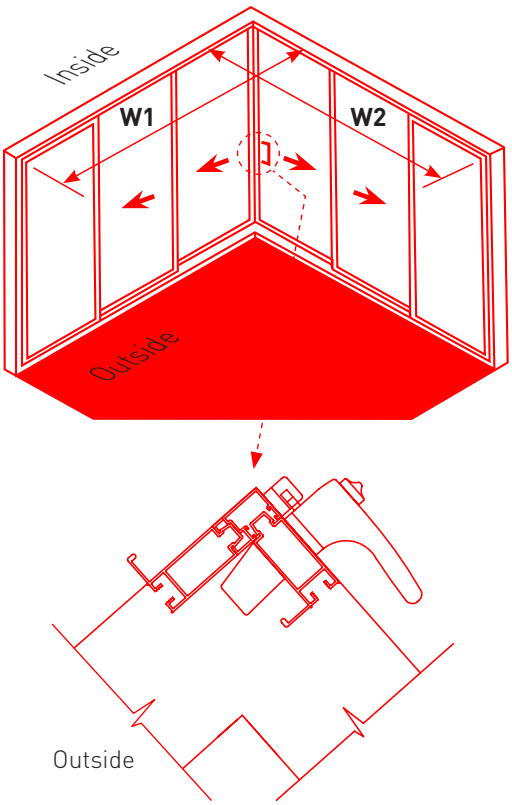

Diagram 2 – Outside Corner

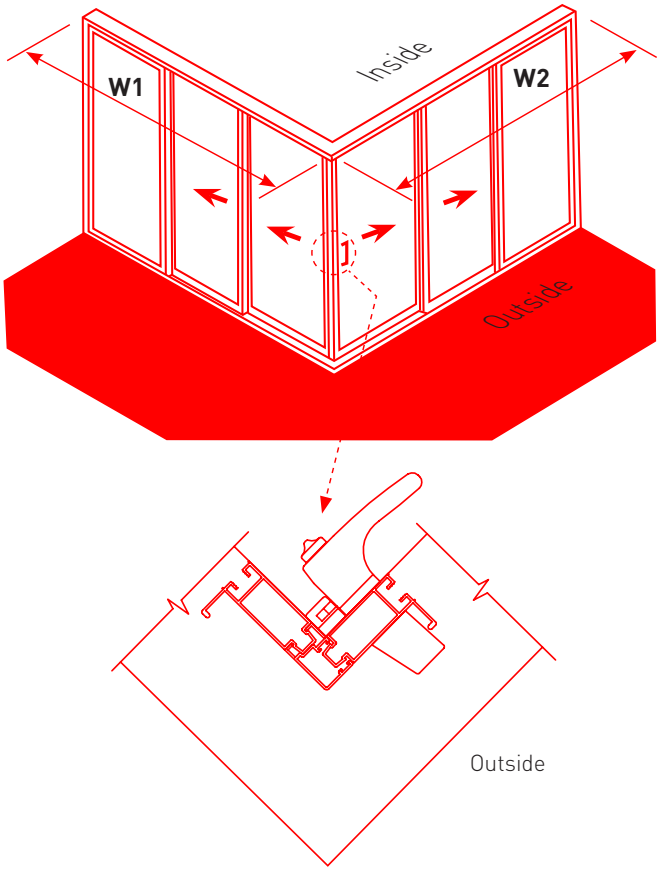

Important - Corner Door Product Specific Notes:

- Consult your G.James representative for:
  - › *Stud Opening* width dimensions relative to your wall construction
  - › Specific reference points for (W1) & (W2) dimensions
  - › Set-out details.
- The *Outer Frame Size* dimensions are based on standard size, toughened glass panels. Additional charge will apply for non-standard sizes.